Protected by copyright. Copying for private or commercial purposes, in part or in whole, is not permitted unless authorised by Volkswagen AG. Volkswagen AG does not guarantee or accept any liability with respect to the correctness of information in this document. Copyright by Volkswagen AG.

Polo Estate 1998 ➤

Direct injection and glow plug system with distributor pump									
Engine ID	AGP	AGR	ALH	AQM	ASV	AYQ			

Edition 10.1999

satelettronica

List of Workshop Manual Repair GroupsList of Workshop Manual Repair GroupsList of Workshop Manual Repair Groups

Polo Estate 1998 ➤

Direct injection and glow plug system with distributor pump

Repair Group

01 - Self-diagnosis

23 - Mixture preparation, Injection

28 - Glow plug system

satelettronica

Copyright. Copying for private or commercial purposes, in part or in whole, is not permitted unless authorised by Volkswagen AG. Volkswagen AG does not guarantee or accept any liability with respect to the correctness of information in this document. Copyright by Volkswagen AG.

Technical information should always be available to the foremen and mechanics, because their careful and constant adherence to the instructions is essential to ensure vehicle road-worthiness and safety. In addition, the normal basic safety precautions for working on motor vehicles must, as a matter of course, be observed.

All rights reserved.
No reproduction without prior agreement from publisher.

Copyright © 2011 Volkswagen AG, Wolfsburg

Contents

01 - Self-diagnosis . . . 1

1 Self-diagnosis . . . 1
1.1 Self-diagnosis . . . 1
1.2 Features of self-diagnosis . . . 1
1.3 Technical data of self-diagnosis . . . 1
1.4 Connecting fault reader V.A.G 1551 and selecting engine control unit . . . 2
1.5 Connecting vehicle diagnosis, testing and information system VAS 5051 and selecting engine control unit . . . 4
1.6 Interrogating fault memory . . . 6
1.7 Erasing fault memory . . . 7

2 Fault table . . . 9
2.1 Fault table . . . 9

3 Final control diagnosis . . . 24
3.1 Final control diagnosis . . . 24
3.2 Performing final control diagnosis . . . 24

4 Measured value blocks . . . 29
4.1 Measured value blocks . . . 29
4.2 Safety precautions . . . 29
4.3 Reading measured value block . . . 29
4.4 Evaluating measured value blocks . . . 30
4.5 Display group 009 . . . 37

23 - Mixture preparation, Injection . . . 47

1 Servicing Diesel direct injection system . . . 47
1.1 Servicing Diesel direct injection system . . . 47
1.2 Safety precautions . . . 47
1.3 Rules for cleanliness . . . 48
1.4 Fitting locations overview . . . 48
1.5 Servicing injection pump . . . 60
1.6 Dismantling and assembling parts of intake manifold . . . 67
1.7 Removing and installing air intake connecting piece . . . 75
1.8 Removing and installing injection pump . . . 76
1.9 Dynamically checking and adjusting commencement of injection . . . 81
1.10 Removing and installing injectors . . . 84
1.11 Checking injectors . . . 86
1.12 Renewing injection timing device cover O-ring . . . 87

2 Checking components and functions . . . 87
2.1 Checking components and functions . . . 87
2.2 Checking Diesel direct injection system voltage supply . . . 87
2.3 Checking engine speed sender . . . 88
2.4 Checking intake manifold pressure sender and elevation sender . . . 90
2.5 Checking coolant temperature sender . . . 92
2.6 Checking intake manifold temperature sender . . . 95
2.7 Checking fuel temperature sender . . . 99
2.8 Checking modulating piston movement sender and quantity adjuster . . . 101
2.9 Checking needle lift sender . . . 105
2.10 Checking injection timing regulation range . . . 107
2.11 Checking air mass meter . . . 109
2.12 Checking intake manifold flap change-over . . . 112
2.13 Checking intake manifold flap change-over valve . . . 114
2.14 Checking intake manifold flap motor . . . 117

3 Checking additional signals . . . 119
3.1 Checking additional signals . . . 119

Protected by copyright. Copyright by Volkswagen AG. Copying for private or commercial purposes, in part or in whole, is not permitted unless authorised by Volkswagen AG. Volkswagen AG does not guarantee or accept any liability with respect to the correctness of information in this document.
satelettronica

3.2 Checking speed signal 119
3.3 Checking signals from brake light switch and brake pedal switch 121
3.4 Checking signal from clutch pedal switch 124
3.5 Checking signals from/to air conditioning system 126
3.6 Checking engine speed signal 129

4 Replacing, coding and matching engine control unit 130
4.1 Replacing, coding and matching engine control unit 130
4.2 Replacing engine control unit 130
4.3 Coding engine control unit 131
4.4 Matching engine control unit to electronic immobilizer 132

28 - Glow plug system 134

1 Checking glow plug system 134
1.1 Checking glow plug system 134
1.2 Checking glow plugs 135

Protected by copyright. Copying for private or commercial purposes, in part or in whole, is not permitted unless authorised by Volkswagen AG. Volkswagen AG does not guarantee or accept any liability with respect to the correctness of information in this document. Copyright by Volkswagen AG.

satelettronica

01 - Self-diagnosis

1 - Self-diagnosis

1.1 - Self-diagnosis

1.2 - Features of self-diagnosis

The control unit for the Diesel direct injection system is equipped with a fault memory.

If faults occur in the sensors and components being monitored, they will be stored in the fault memory together with an indication of the type of fault.

Faults which only occur sporadically will have the addendum "sporadic fault" on the print out. These faults will be indicated on the display by the addendum "/SP". The cause of sporadic faults can be e.g. a loose contact or a brief open circuit. If a sporadic fault does not occur again within 50 engine starts, it will be erased from the fault memory.

If faults are recognized, that affect the driving condition then the glow period warning lamp flashes.

The stored faults can be read out with the fault reader V.A.G 1551, the vehicle system tester V.A.G 1552 or with the new tester VAS 5051 => Page 6 .

The fault memory must be erased after the faults has been eliminated => Page 7 .

Note:

General information for self-diagnosis is in the fault reader V.A.G 1551 and the vehicle system tester V.A.G 1552 instruction manuals.

1.3 - Technical data of self-diagnosis

Equipment

- The data transfer between control unit and fault reader V.A.G 1551 or vehicle system tester V.A.G 1552 is carried out in the operating mode "Rapid data transfer".
- Fault memory: Non-volatile memory and volatile memory1)

1) Will be cancelled after 50th engine start if fault has not occurred again.

Interrogating control unit versions

The control unit version is displayed when the fault reader V.A.G 1551 or the vehicle system tester V.A.G 1552 is connected and engine electronics control unit selected => Page 2 .

Protected by copyright. Copying for private or commercial purposes, in part or in whole, is not permitted unless authorised by Volkswagen AG. Volkswagen AG does not guarantee or accept any liability with respect to the correctness of information in this document. Copyright by Volkswagen AG.
satelettronica

Functions which can be selected when using address word 01, engine electronics, of the fault readers V.A.G 1551/1552 or VAS 5051

Note:
The prerequisites to select the desired functions can be found in the following table.

Function		Prerequisite		
Functions on fault reader V.A.G 1551 or on system tester V.A.G 1552		Engine stopped, ignition switched on	Engine running at idling speed	Vehicle being driven
01	Interrogate control unit version	yes	yes	yes
02	Interrogate fault memory	yes1)	yes	yes
03	Final control diagnosis	yes	yes	no
04	Basic setting	no	yes	no
05	Erase fault memory	yes	yes	yes
06	End output	yes	yes	yes
07	Code control unit	yes	no	no
08	Read measured value block	yes	yes	yes

1) Only carry out with ignition switched on, when engine does not start.

1.4 - Connecting fault reader V.A.G 1551 and selecting engine control unit

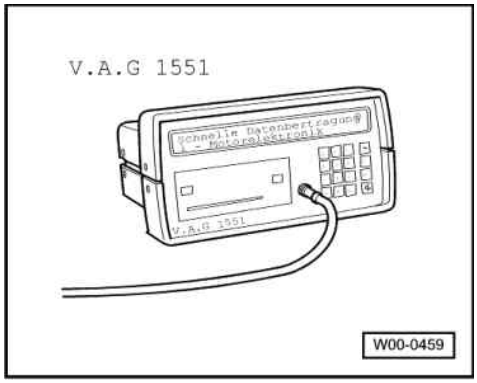

Special tools, workshop equipment, testers, measuring instruments and auxiliary items required

- V.A.G 1551 Fault reader

Note:
The vehicle system tester V.A.G 1552 can be used instead of the fault reader V.A.G 1551, however a print-out is not possible.
All functions of V.A.G 1551/1552 can also be carried out with the new tester V.A.S 5051. Connecting VAS 5051 =>Page 4 .

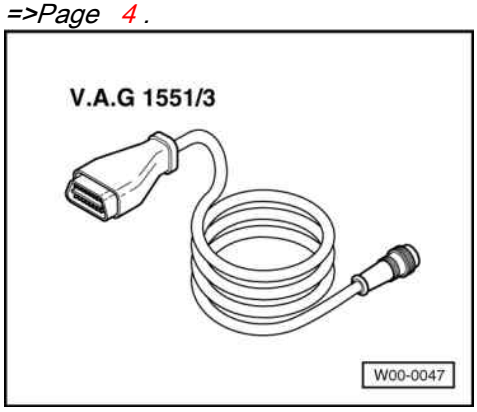

Protected by copyright. Copying for private or commercial purposes, in part or in whole, is not permitted unless authorised by Volkswagen AG. Volkswagen AG does not guarantee or accept any liability with respect to the correctness of information in this document. Copyright by Volkswagen AG.
satelettronica

- V.A.G 1551/3 Cable

Check conditions

- The fuses must be OK.
- Strip fuses in fuse holder on battery OK.
- The battery voltage must be at least 11.5 V.
- Earth connection in plenum chamber OK.
- Earth connection between engine (on gearbox bell housing) and body (below battery) OK.
- All electrical consumers, e.g. lights and rear window heating must be switched off.

Work sequence

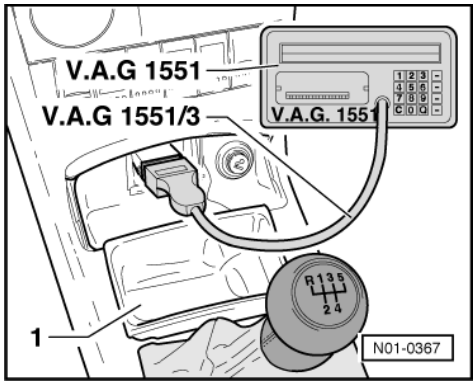

- -> Remove ash tray -1-.
- Connect fault reader V.A.G 1551 with cable V.A.G 1551/3.

After the fault reader has been connected:

- Depending upon desired function:
  Switch ignition on
  or
  Start engine => Page 2 , Table "Selectable functions".

Notes:

- If the display remains blank, check voltage supply for diagnostic connection:

=> Current flow diagrams, Electrical fault finding and Fitting locations

- If the display does not indicate as described in the work sequence:

=> Fault reader operating instructions

- If due to an input fault "Fault in the data transfer!" is displayed, pull wire off fault reader, reconnect and repeat work step.

-> Indicated on display:

```
V.A.G - SELF DIAGNOSIS    HELP
     1 - Rapid data transfer*
     2 - Flash code output*
```

* Appears alternately

- Operate fault reader taking into account the information on the display:
- Press key 1 for "Rapid data transfer".
- Press keys 0 and 1 for address word "Engine electronics" and confirm entry with Q key.

-> The fault reader V.A.G 1551 display will show the control unit identification, e.g.:

```
038906018FB 1.9ltr.      R4      EDC
00SG 2167 □
Coding 00002      WSC xxxxx
```

Protected by copyright. Copyright by Volkswagen AG. Volkswagen AG does not guarantee or accept any liability with respect to the correctness of information in this document. Copyright by Volkswagen AG. Copying for private or commercial purposes, in part or in whole, is not permitted unless authorised by Volkswagen AG.
satelettronica

- 038906018FB = Part No. of the control unit (for up-to-date control unit versions see parts catalogue)
- 1.9 ltr. = Engine capacity
- R4 = Type of engine (4 Cyl. in-line engine)
- EDC = Injection system (Electronic Diesel Control)
- SG = Gearbox type: manual gearbox
- 2167 = Control unit software version
- Coding 00002 = Control unit coding. Coding variants of engine control unit => Page 131 .
- WSC xxxxx = Workshop code from V.A.G 1551, of the workshop who carried out the last coding. (If the factory coding has not been changed, WSC 00000 appears)

- Press the ⇒key.

-> Indicated on display:

```
Rapid data transfer      HELP
Select function XX
```

- Further measures see repair procedures.

1.5 - Connecting vehicle diagnosis, testing and information system VAS 5051 and selecting engine control unit

All functions which could be done with V.A.G 1551/1552 can also be done with the new tester VAS 5051 in the operating mode: "vehicle self-diagnosis":

=> Operating instructions for Vehicle Diagnosis, Testing and Information System VAS 5051.

Special tools, workshop equipment, testers, measuring instruments and auxiliary items required

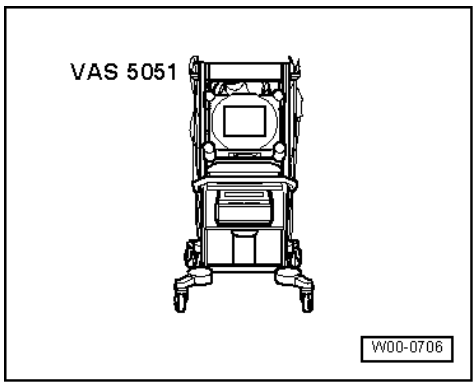

- VAS 5051 Vehicle diagnosis, testing and information system

Check conditions

- The fuses must be OK.
- Strip fuses in fuse holder on battery OK.
- The battery voltage must be at least 11.5 V.
- Earth connection in plenum chamber OK.
- Earth connection between engine (on gearbox bell housing) and body (below battery) OK.
- All electrical consumers, e.g. lights and rear window heating must be switched off.

Work sequence

- Connect tester VAS 5051 with diagnosis cable VAS 5051/1 or VAS 5051/3 as follows:

satelettronica

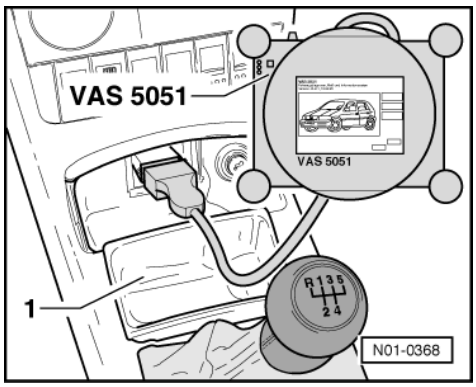

- -> Remove ash tray -1-.
- Fit diagnosis cable connector onto diagnosis connector.
- Depending upon desired function:
  Switch ignition on
  or
  Start engine => Page 2 , Table "Selectable functions".

Notes:

- The display fields will be displayed from top to bottom in functions 04 - Basic settings or 08 - Read data block.
- If the display does not indicate as described in the work sequence:

=> Operating instructions for Vehicle Diagnosis, Testing and Information System VAS 5051.

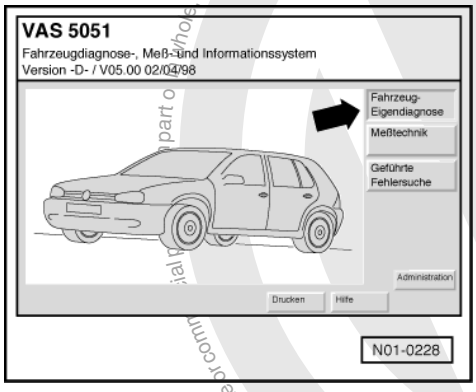

-> Indicated on display:

Select operating mode:

- Press the button on the display for "Vehicle self-diagnosis" -arrow-.

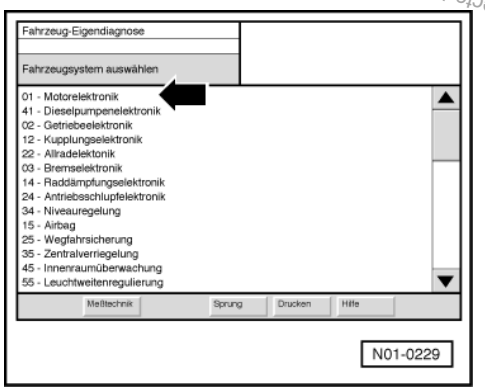

Protected by copyright. Copying for private or commercial purposes, in part or in whole is not permitted unless authorised by Volkswagen AG. Volkswagen AG does not guarantee or accept any liability with respect to the correctness of information in this document. Copyright by Volkswagen AG.
satelettronica

-> Indicated on display:

Select vehicle system:

- Press keys "01 - Engine electronics" on the display -arrow-.

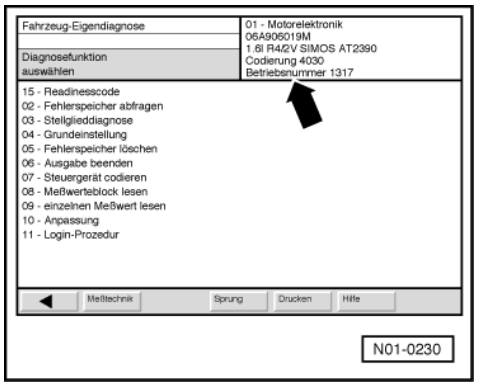

-> On the display the control unit identification and coding are displayed, e.g.:

If the coding differs from the vehicle version, then:

- Checking control unit coding => Page 131 ,
  Coding engine control unit

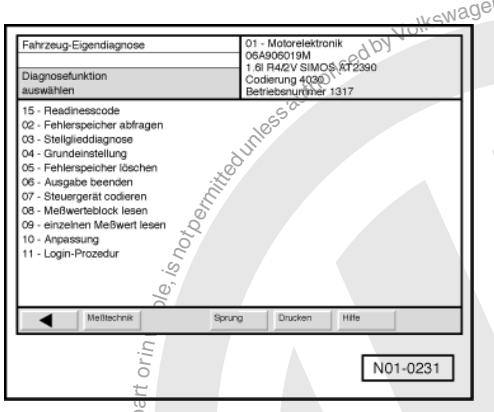

-> Indicated on display:

Select diagnostic function:

At this point all diagnostic functions are available.

- Press the desired function on the display.
- Further measures see repair procedures.

1.6 - Interrogating fault memory

Special tools, workshop equipment, testers, measuring instruments and auxiliary items required

- Fault reader V.A.G 1551 (or vehicle system tester V.A.G 1552) with cable V.A.G 1551/3

Protected by copyright. Copyright by Volkswagen AG. Volkswagen AG does not guarantee or accept any liability with respect to the correctness of information in this document. Copyright by Volkswagen AG. Reproduction, in whole or in part or in any form or medium without prior written consent is not permitted unless authorised by Volkswagen AG. Copyright for private or commercial purposes, in part or in whole, is not permitted unless authorised by Volkswagen AG.
satelettronica

Note:

All functions which could previously be performed with V.A.G 1551/1552 can also be performed with the new tester VAS 5051.

Work sequence

- Connect fault reader V.A.G 1551 (V.A.G 1552) and with the "Address word" 01 select the engine electronics control unit. When doing this the engine should be idling.
  (Connecting fault reader and selecting engine electronics control unit => Page 2 .)

Only when engine does not start:

- Switch ignition on.

- Switch on fault reader printer with the print key. The warning lamp in key must light up.

-> Indicated on display:

```
Rapid data transfer      HELP
Select function XX
```

- Operate fault reader taking into account the information on the display:
- Press keys 0 and 2 for function "Interrogate fault memory" and confirm entry with Q key.

-> The number of faults stored or "No fault recognised!" will be shown on the display.

```
X Faults recognised!
```

If one or more faults are stored:

The stored faults will be displayed and printed out one after the other.

-> After the stored faults have been printed out, the display will show:

```
Rapid data transfer      HELP
Select function XX
```

- Eliminate the printed out faults using the fault table
  => Page 9 .
- Afterwards erase fault memory
  => Page 7 .

If no fault is stored:

- Press the ⇒key.

-> Indicated on display:

```
Rapid data transfer      HELP
Select function XX
```

- Press keys 0 and 6 for the function "End output" and confirm entry with the Q key.
- Switch off ignition.

1.7 - Erasing fault memory

Special tools, workshop equipment, testers, measuring instruments and auxiliary items required

◆ Fault reader V.A.G 1551 (or vehicle system tester V.A.G 1552) with cable V.A.G 1551/3

Protected by copyright. Copying for private or commercial purposes, in part or in whole, is not permitted unless authorised by Volkswagen AG. Volkswagen AG does not guarantee or accept any liability with respect to the correctness of information in this document. Copyright by Volkswagen AG.
satelettronica

Note:

All functions which could previously be performed with V.A.G 1551/1552 can also be performed with the new tester VAS 5051.

Test conditions

- Fault eliminated

Note:

After eliminating faults the fault memory must be interrogated again as follows and then erased.

Work sequence

- Connect fault reader V.A.G 1551 (V.A.G 1552) and select engine electronics control unit with the "Address word" 01. When doing this the engine must be running at idling speed.
  (Connecting fault reader and selecting engine electronics control unit => Page 2 .)

-> Indicated on display:

```
Rapid data transfer      HELP
Select function XX
```

- Press keys 0 and 2 for function "Interrogate fault memory" and confirm entry with Q key.

```
Rapid data transfer      HELP
Select function XX
```

  -> Press ⇒key until all faults still stored have appeared and the display reads:
- Press keys 0 and 5 for the function "Erase fault memory" and confirm entry with Q key.

-> Indicated on display:

```
Rapid data transfer
Fault memory is erased!
```

- If the fault memory will not erase there is a fault still in the system and this must be rectified.
- Press the ⇒key.

-> Indicated on display:

```
Rapid data transfer      HELP
Select function XX
```

- Press keys 0 and 6 for the function "End output" and confirm entry with the Q key.

Automatic test sequence

During test and assembly work faults can be recognised from other control units like e.g. plug disconnected. Therefore on completion the fault memories of all control units must be interrogated and erased. To do this:

- Press key 0 twice for address word "Automatic test sequence" and confirm entry with Q key. The V.A.G 1551 transmits all known address words one after the other.

When a control unit answers with its identification the number of stored faults appears on the display or "No fault recognised".

Any system faults that are stored will be displayed one after the other and printed out. The V.A.G 1551 will then transmit the next address word.

-> The automatic test sequence has ended when the following appears on the display:

```
V.A.G - SELF-DIAGNOSIS      HELP
1 - Rapid data transfer*
2 - Flash code output*
```

* Appears alternately

Protected by copyright. Copyright by Volkswagen AG. Volkswagen AG does not guarantee or accept any liability with respect to the correctness of information in this document. Copyright by Volkswagen AG. Reproduction, in part or whole, is not permitted unless authorised by Volkswagen AG.
satelettronica

- Erase all fault memories and then carry out a road test.

Observe the valid safety measures during a test drive => Page 29 .

- Interrogate the fault memories of all control units again using the "automatic test sequence". No faults must be stored in fault memory.

If no fault is stored:

- Press the ⇒key.

-> Indicated on display:

```
Rapid data transfer      HELP
Select function XX
```

- Press keys 0 and 6 for the function "End output" and confirm entry with the Q key.
- Switch off ignition.

2 - Fault table

2.1 - Fault table

Protected by copyright. Copying for private or commercial purposes, in whole or in part, is not permitted unless authorised by Volkswagen AG. Volkswagen AG does not guarantee or accept any liability with respect to the correctness of information in this document. Copyright by Volkswagen AG.

satelettronica

Notes:

- The fault table is listed in ascending order, according to the 5 digit V.A.G- fault code on the left.
- In addition, the so-called P codes, for example, P0118, will also be issued. Currently, you do not need to heed the P codes, which will be used only in future self-diagnosis systems.
- Explanation of the fault types (e.g. "open circuit/short circuit to earth"):

=> Fault reader operating instructions

- If components are indicated as faulty:
  First check the wiring and connectors to these components as well as the system earth connections according to current flow diagram. This is particularly relevant if faults are output as "occurring sporadically" (SP).
- Erase fault memory after rectifying faults=>Page 7 .

V.A.G 1551 print out, e.g.:

16502 P0118 035

Coolant temperature sender -G62

Signal too high

Sporadic fault

Explanation:

- 16502 = Fault code
- P0118 = Additional fault code
- 035 = Fault type as a number
- Coolant temperature sender -G62 = Faulty current path or fault location
- Signal too high = Fault type as text
- Sporadic faults = Faults that are not always present e.g. loose contact

V.A.G 1551 print-out	Possible causes of fault	Possible effects	Fault remedy
00513 Engine speed sender -G28			

implausible signal	- G28 defective - Distance speed sender/sender wheel too large - Metal swarf on G28 or mounting pedestal loose	- Glow period warning lamp flashes - Raised idling speed - Poor starting - Engine running rough - Reduced output - No indication on rev-counter	- Check G28 =>Page 88
no signal	- G28 defective - Wiring open or short circuit		

V.A.G 1551 print-out	Possible causes of fault	Possible effects	Fault remedy
00522 Coolant temperature sender -G62 Short to earth	- G62 defective - Wiring short circuit to earth	- Black smoke when starting - Glow period always approx. 20 secs.	- Check G62 =>Page 92
Open circuit/ short to positive	- G62 defective - Open circuit or wiring short circuit to positive		
Implausible signal	- G62 defective - Incorrect sender for coolant temperature - Thermostat defective		Check thermostat: => Repair group 19; Removing and installing parts of cooling system; Parts of cooling system engine side Parts of cooling system engine side

V.A.G 1551 print-out	Possible causes of fault	Possible effects	Fault remedy
00527 Intake manifold temperature sender -G72 Short to earth	- G72 defective - Wiring short circuit to earth	- Goes to control value 136.8. °C	- Check G72 =>Page 95
Open circuit/short to positive	- G72 defective - Open circuit or short to positive		
00532 Supply voltage implausible signal	- Voltage supply relay terminal 30 (J317) defective	- Various running problems including engine stops	- Check voltage supply of control unit for Diesel direct injection system =>Page 87

V.A.G 1551 print-out	Possible causes of fault	Possible effects	Fault remedy
00539 Fuel temperature sender -G81 Short to earth	- G81 defective - Wiring short to earth	- Increased emission figures	- Check G81 => Page 99
Open circuit/short to positive	- G81 defective - Wiring open circuit or short to positive		

Protected by copyright. Copying for private or commercial purposes, in part or in whole, is not permitted unless authorised by Volkswagen AG. Volkswagen AG does not guarantee or accept any liability with respect to the correctness of information in this document. Copyright by Volkswagen AG.
satelettronica

V.A.G 1551 print-out	Possible causes of fault	Possible effects	Fault remedy
00542 Needle lift sender -G80 Input open	- G80 defective - Wiring open or short circuit	- Glow period warning lamp flashes - Engine runs rough - Reduced output - Increased emission figures	- Check G80 => Page 105
Open circuit/short to positive	- G81 defective - Wiring open circuit or short to positive		
Short to earth			
Implausible signal	- G80 defective - Injection system wiring to 5th cylinder not OK. - Fuel shortage - Air in fuel system		

V.A.G 1551 print-out	Possible causes of fault	Possible effects	Fault remedy
00550 Injection commencement regulation Control difference	- Commencement of injection valve (N108) defective - Needle lift sender (G80) defective - Fuel tank empty - Fuel supply not OK., reduced fuel - Start of delivery not OK.	- Engine running rough - Reduced output - Increased emission values - Poor cold start characteristics	- Check N108 =>Page 81
00625 Speed signal implausible signal	- No signal from speedometer sender (G22)	- Speedom. displ. not OK. - Cruise control system switched off - Vehicle jerks when gear is selected - Air conditioner will be switched off	- Check signal from G22 =>Page 119 Check dash panel insert coding => Repair group 01; Electrical system
Signal too high	- G22 defective - Incorrect coding of dash panel insert		
00626 Glow period warning lamp - K29 Open circuit/short to earth	- Wiring open circuit - Bulb defective	- Glow period warning lamp not functioning	- Check glow period warning lamp (K29) => Page 24 , Final control diagnosis
	- Short to earth	- Glow period warning lamp permanently on	
Short to positive	- Short to positive	- Glow period warning lamp not functioning	
00668 Vehicle voltage terminal 30			

Copyright. Copyright by Volkswagen AG. Volkswagen AG does not guarantee or accept any liability with respect to the correctness of information in this document. Copying for private or commercial purposes, in part or in whole, not permitted unless authorised by Volkswagen AG.
satelettronica

Implausible signal	- Current supply relay terminal 30 (J317) defective - Relay sticks (sporadically)	- Engine will not start - Various running problems including engine will not start	- Check Diesel direct injection system control unit voltage supply =>Page 87

V.A.G 1551 print-out	Possible causes of fault	Possible effects	Fault remedy
00671 CCS Switch -E45 undefined switch position	- E45 defective - Wiring open/short circuit	- Cruise control system switched off	- Check cruise control system => Current flow diagrams, Electrical fault finding and Fitting locations binder
00741 Brake pedal monitoring Implausible signal	- Brake light switch (F) defective - Brake pedal switch (F47) defective	- Glow period warning lamp flashes - Brake light defective	- Check signals from F and F47 =>Page 121
00765 Modulating piston movement sender -G149	- Injection pump defective - Wiring open/short circuit	- Glow period warning lamp flashes - Various running problems - Engine stops	- Check G149 => Page 101

V.A.G 1551 print-out	Possible causes of fault	Possible effects	Fault remedy
00777 Accelerator position sender -G79 implausible signal	- G79 defective - G79 incorrectly set	- Glow period warning lamp flashes - Increased idling speed	- Check G79: => Repair group 20; Removing and installing parts of fuel supply system; Checking accelerator pedal sender Checking accelerator pedal sender
Short to positive	- G79 defective - Wiring short to positive		
Voltage supply	- Operating voltage too high or too low - Wiring open circuit		

V.A.G 1551 print-out	Possible causes of fault	Possible effects	Fault remedy
01044 Control unit incorrectly coded	- Invalid control unit coding	- Glow plug warning lamp blinks	- Coding control unit =>Page 131
01117 Load signal for alternator terminal DF			

Protected by Copyright. Copying for private or commercial purposes, in part or in whole, is not permitted unless authorised by Volkswagen AG. Volkswagen AG does not make any representation or warranty regarding the accuracy or completeness of the information in this document. Volkswagen AG does not accept any liability with regard to the correctness of the information in this document. Copyright by Volkswagen AG.

satelettronica

Implausible signal	- Alternator defective - Voltage regulator defective - Wiring open circuit	- Engine pre-heating not operating	- Check alternator => Current flow diagram, Electrical fault finding and Fitting locations binder

V.A.G 1551 print-out	Possible causes of fault	Possible effects	Fault remedy
01193 Low heat output relay -J359 Open circuit/short to earth	- Wiring open circuit or short to earth - J359 defective	- Engine preheating not functioning	- Check J359 =>Page 24 , Final control diagnosis
01194 High heat output relay -J360	- Wiring open circuit or short to earth - J360 defective	- Engine preheating not functioning	- Check J360 =>Page 24 , Final control diagnosis
01237 Fuel cut-off valve -N109 Mechanical fault	- N109 defective, leaking or sticking	- Reduced output - Engine will not start	- Check N109 =>Page 24 , Final control diagnosis
Open/short circuit to earth	- N109 defective - Wiring open/short to earth		

V.A.G 1551 print-out	Possible causes of fault	Possible effects	Fault remedy
01265 Exhaust gas recirculation valve -N18 Open circuit/short to earth	- Wiring open circuit - Exhaust gas recirculation valve defective	- No exhaust gas recirculation	- Check N18 =>Page 24 , Final control diagnosis
	- Short to earth	- Too much exhaust gas recirculation - Reduced output, black smoke	
Short to positive	- Short to positive	- No exhaust gas recirculation	
01266 Glow plug relay -J52 Short to positive	- Wiring short to positive - J52 defective	- No glow period - Poor cold starting - Glow period warning lamp (K29) flashes	- Check J52 =>Page 24 , Final control diagnosis
Open circuit/short to earth	- Wiring open circuit or short to earth - J52 defective		
01268 Metering adjuster -N146 Control difference	- Injection pump defective - Wiring open/short circuit	- Pre glow warning lamp flashes - Various running problems - Engine stops	- Check N146 =>Page 101
Upper stop value	- Metering adjuster (N146) defective Upper stop value attained	- Black smoke Reduced output	

Protected by copyright. Copying for private or commercial purposes, in part or in whole, is not permitted unless authorised by Volkswagen AG. Volkswagen AG does not guarantee or assume any liability with respect to the correctness of information in this document. Copyright by Volkswagen AG.
satelettronica

Lower stop value	- Metering adjuster (N146) defective Lower stop value attained	- Reduced output	

V.A.G 1551 print-out	Possible causes of fault	Possible effects	Fault remedy
01269 Commencement of injection valve -N108 Open circuit/short to earth	- Wiring open circuit - Commencement of injection valve defective	- Engine knocks at idling, because commencement of injection is constantly "advanced"	- Check N108 =>Page 24 , Final control diagnosis
	- Short to earth	- Poor performance, because commencement of injection is constantly "retarded"	
Short to positive	- Short to positive	- Engine knocks at idling, because commencement of injection is constantly "advanced"	
01282 Intake manifold flap change-over valve -N239 Short to positive	- Wiring short to positive - N239 defective/stuck in open position	- Cold start problems - Cold idling problems - Hard load change - Idling problems	Engine codes AGP, AQM: Check N239 =>Page 24 , Final control diagnosis
Open circuit/short to earth	- Wiring open circuit or short to earth - N239 defective		Engine codes AGR, ALH, ASV: Check N239 =>Page 114

V.A.G 1551 print-out	Possible causes of fault	Possible effects	Fault remedy
01283 Intake manifold flap motor -V157 Open circuit/short to earth	- Wiring open circuit - Intake manifold flap motor defective	- No exhaust gas recirculation, throttle valve fully open	- Check V157 =>Page 117
Short to positive	- Short to positive		
defective	- Control flap defective	- No exhaust gas recirculation, throttle valve fully open	- Check V157 =>Page 117
16485P0101 Air mass meter -G70 Implausible signal	- Wiring open circuit or short to earth - G70 defective	- Reduced output - Black smoke	- Check G70 => Page 109

V.A.G 1551 print-out	Possible causes of fault	Possible effects	Fault remedy
16500P0116 Coolant temperature sender -G62			

Protected by copyright. Copying for private or commercial purposes, in part or in whole, is not permitted unless authorised by Volkswagen AG. Volkswagen AG does not guarantee or accept any liability with respect to the correctness of information in this document. Copyright by Volkswagen AG.

satelettronica

V.A.G 1551 print-out	Possible causes of fault	Possible effects	Fault remedy
Implausible signal	- G62 defective - Thermostat defective	- Black smoke during start - Glow period always takes about 20 seconds	- Check G62 =>Page 92 Check thermostat: => Repair group 19; Removing and installing parts of cooling system; Parts of cooling system engine side Parts of cooling system engine side

V.A.G 1551 print-out	Possible causes of fault	Possible effects	Fault remedy
16705P0321 Engine speed sender -G28 Implausible signal	- G28 defective - Speed sender/sender wheel gap too large - Metal swarf on G28 or mounting loose	- Engine will not start - Engine stops - Glow period warning lamp flashes - No indication on rev. counter	- Check G28 =>Page 88
16706P0322 Engine speed sender -G28 No signal	- Wiring open circuit or short circuit - G28 defective	- Engine will not start - Engine stops - Glow period warning lamp flashes - Rev. counter no display	- Check G28 =>Page 88

V.A.G 1551 print-out	Possible causes of fault	Possible effects	Fault remedy
16885P0501 Road speed signal Implausible signal	- No signal from speedometer sender (G22) - Dash panel insert defective	- Speedometer display not OK. - Vehicle jerks when gear is selected - Air conditioner will be switched off	- Check speedometer signal =>Page 119
16989P0605 Control unit defective	- Control unit (J248) internally defective	- Various running problems - Engine stops	- Replace J248 =>Page 130

V.A.G 1551 print-out	Possible causes of fault	Possible effects	Fault remedy
17552P1144 Air mass meter -G70 Open circuit/short to earth	- Wiring open circuit or short to earth - G70 defective	- Reduced output - Black smoke	- Check G70 => Page 109
17553P1145 Air mass meter -G70 Short to positive	- Wiring open circuit or short to positive - G70 defective	- Reduced output - Black smoke	- Check G70 => Page 109

V.A.G 1551 print-out	Possible causes of fault	Possible effects	Fault remedy
17554P1146			

satelettronica

V.A.G 1551 print-out	Possible causes of fault	Possible effects	Fault remedy
Air mass meter -G70 Voltage supply	- Operating voltage to high or too low - Wiring open circuit	- Reduced output - Black smoke	- Check G70 => Page 109
17563P1155 Intake manifold pressure sender -G71 Short to positive	- Wiring short to positive - G71 defective	- Reduced output - Increased emission figures	- Check G71 =>Page 90 , Checking intake manifold pressure and elevation senders

V.A.G 1551 print-out	Possible causes of fault	Possible effects	Fault remedy
17564P1156 Intake manifold pressure sender -G71 Open circuit/short to earth	- Wiring open circuit or short to earth - G71 defective	- Reduced output - Increased emission figures	- Check G71 =>Page 90 , Checking intake manifold pressure and elevation senders
17565P1157 Intake manifold pressure sender -G71 Voltage supply	- Operating voltage too high or too low - Wiring open circuit - G71 defective	- Reduced output - Increased emission figures	- Check G71 =>Page 90 , Checking intake manifold pressure and elevation senders

V.A.G 1551 print-out	Possible causes of fault	Possible effects	Fault remedy
17568P1160 Intake manifold temperature sender -G72 Short to earth	- Wiring short to earth - G72 defective	- Goes to predetermined value 136.8 °C	- Check G72 =>Page 95
17569P1161 Intake manifold temperature sender -G72 Open circuit/short to positive	- Wiring open circuit or short to positive - G72 defective	- Goes to predetermined value 136.8 °C	- Check G72 =>Page 95

V.A.G 1551 print-out	Possible causes of fault	Possible effects	Fault remedy
17570P1162 Fuel temperature sender -G81 Short to earth	- Wiring short to earth - G81 defective	- Goes to predetermined value -5.4 °C - Increased emission figure	- Check G81 => Page 99
17571P1163 Fuel temperature sender -G81			

Protected by copyright. Copying for private or commercial purposes, in part or in whole, is not permitted unless authorised by Volkswagen AG. Volkswagen AG does not guarantee or accept any liability with respect to the correctness of information in this document. Copyright by Volkswagen AG.
satelettronica

V.A.G 1551 print-out	Possible causes of fault	Possible effects	Fault remedy
Open circuit/short to positive	- Wiring open circuit or short to positive - G81 defective	- Goes to predetermined value -5.4 °C - Increased emission figures	- Check G81 => Page 99

V.A.G 1551 print-out	Possible causes of fault	Possible effects	Fault remedy
17653P1245 Needle lift sender -G80 Short to earth	- Wiring short to earth - G80 defective	- Glow period warning lamp flashes - Engine runs rough - Reduced output - Increased emission figures	- Check G80 => Page 105
17654P1246 Needle lift sender -G80 Implausible signal	- Insufficient fuel - Air in fuel system - Injector pipe to injector with needle lift sender not OK - G80 defective	- Glow period warning lamp flashes - Engine runs rough - Reduced output - Increased emission figures	- Check G80 => Page 105

V.A.G 1551 print-out	Possible causes of fault	Possible effects	Fault remedy
17655P1247 Needle lift sender -G80 Open circuit/short to positive	- Wiring open circuit or short to positive - G80 defective	- Glow period warning lamp flashes - Engine runs rough - Reduced output - Increased emission figures	- Check G80 => Page 105
17656P1248 Injection commencement regulation Control difference	- Fuel tank empty - Fuel supply not OK, insufficient fuel - Start of delivery not OK - Commencement of injection valve (N108) defective - Needle lift sender (G80) defective	- Engine runs rough - Reduced output - Increased emission figures - Poor cold start characteristics	- Fuel filter or fuel supply pipes blocked Check dynamically and adjust commencement of injection =>Page 105

V.A.G 1551 print-out	Possible causes of fault	Possible effects	Fault remedy
17659P1251 Commencement of injection valve -N108 Short to positive	- Wiring short to positive	- Engine knocks at idling because commencement of injection is constantly "advanced"	- Check N108 =>Page 24 , Final control diagnosis
17660P1252 Commencement of injection valve -N108			

Copyright by Volkswagen AG. Volkswagen AG does not guarantee or accept any liability with respect to the correctness of information. Copyright by Volkswagen AG. Protected by copyright. Copying for private or commercial purposes, in part or in whole, is not permitted unless authorised by Volkswagen AG.
satelettronica

V.A.G 1551 print-out	Possible causes of fault	Possible effects	Fault remedy
Open circuit/short to earth	- Wiring open circuit - N108 defective	- Engine knocks at idling because commencement of injection is constantly "advanced"	- Check N108 =>Page 24 , Final control diagnosis
	- Wiring short to earth	- Poor performance, because commencement of injection is constantly "retarded"	

V.A.G 1551 print-out	Possible causes of fault	Possible effects	Fault remedy
17663P1255 Coolant temperature sender -G62 Short to earth	- Wiring short to earth - G62 defective	- Black smoke during start - Glow period is always about 20 seconds	- Check G62 =>Page 92
17664P1256 Coolant temperature sender -G62 Open circuit/short to positive	- Wiring open circuit or short to positive - G62 defective	- Black smoke during start - Glow period is always about 20 seconds	- Check G62 =>Page 92

V.A.G 1551 print-out	Possible causes of fault	Possible effects	Fault remedy
17762P1354 Modulating piston movement sender -G149 Electrical fault in current circuit	- Injection pump defective - Wiring open circuit or short circuit	- Glow period warning lamp flashes - Various running problems - Engine stops	- Check G149 => Page 101 , Checking modul. piston movement sender+metering adjuster
17795P1387 Control unit defective	- Control unit (J248) internally defective	- Various running problems - Engine stops	- Replace J248 =>Page 130
17810P1402 Exhaust gas recirculation valve - N18 Short to positive	- Wiring short to positive	- No exhaust gas recirculation	- Check N18 =>Page 24 , Final control diagnosis

V.A.G 1551 print-out	Possible causes of fault	Possible effects	Fault remedy
17849P1441 Exhaust gas recirculation valve - N18 Open circuit/short to earth	- Wiring open circuit - N18 defective	- No exhaust gas recirculation	- Check N18 =>Page 24 , Final control diagnosis
	- Wiring short to earth	- Too much exhaust gas recirculation - Reduced output, black smoke	
17911P1503			

Protected by copyright. Copying for private or commercial purposes, in part or in whole, is not permitted unless authorised by Volkswagen AG. Volkswagen AG does not guarantee or accept any liability with respect to the correctness of information in this document. Copyright by Volkswagen AG.
satelettronica

V.A.G 1551 print-out	Possible causes of fault	Possible effects	Fault remedy
Load signal from alternator DF terminal Implausible signal	- Alternator defective - Voltage regulator defective - Wiring open circuit	- Engine pre-heating not operating	- Check alternator => Current flow diagram, Electrical fault finding and Fitting locations binder

V.A.G 1551 print-out	Possible causes of fault	Possible effects	Fault remedy
17945P1537 Fuel cut-off valve -N109 Faulty function	- N109 defective, leaking or sticking	- Reduced output - Engine stops	- Check N109 =>Page 24 , Final control diagnosis
17946P1538 Fuel cut-off valve -N109 Open circuit/short to earth	- Wiring open circuit or short to earth - N109 defective	- Reduced output - Engine stops	- Check N109 =>Page 24 , Final control diagnosis

V.A.G 1551 print-out	Possible causes of fault	Possible effects	Fault remedy
17948P1540 Road speed signal Signal too high	- Road speed more than 260 km/h - Dash panel insert defective	- Speedometer display not OK - Vehicle jerks when gear is selected - Air conditioner is switched off	-Check speedometer signal =>Page 119
17954P1546 Charge pressure control solenoid valve -N75 Short to positive	- Wiring short to positive	- Reduced output - Charge pressure too low	- Check N75 =>Page 24 , Final control diagnosis

V.A.G 1551 print-out	Possible causes of fault	Possible effects	Fault remedy
17957P1549 Charge pressure control solenoid valve -N75 Open circuit/short to earth	- Wiring open circuit - N75 defective	- Reduced output - Charge pressure too low	- Check N75 =>Page 24 , Final control diagnosis
	- Wiring short to earth	- Reduced output - Charge pressure too high	
17964P1556 Charge pressure control			

Protected by copyright. Copying for private or commercial purposes, in part or in whole, is not permitted unless authorised by Volkswagen AG. Volkswagen AG does not guarantee or accept any liability with respect to the correctness of information in this document. Copyright by Volkswagen AG.
satelettronica

V.A.G 1551 print-out	Possible causes of fault	Possible effects	Fault remedy
Regulating limit not reached	- N75 defective - Turbocharger defective - Leaks between turbocharger and engine (charge air path)	- Reduced output - Charge pressure too low	- Check N75 =>Page 24 , Final control diagnosis Check charge pressure control => Repair group 21; Checking charge pressure system; Checking charge pressure control Checking charge pressure control

V.A.G 1551 print-out	Possible causes of fault	Possible effects	Fault remedy
17965P1557 Charge pressure control Regulation limit surpassed	- Hose connections interchanged, not attached	- Reduced output - Charge pressure too high	- Check N75 =>Page 24 , Final control diagnosis Check charge pressure: => Repair group 21; Checking charge pressure system; Checking charge pressure control Checking charge pressure control
17969P1561 Metering adjuster -N146 Control difference	- Injection pump defective - Wiring open circuit or short circuit	- Glow plug warning lamp flashes - Various running problems - Engine stops	- Check N146 =>Page 101 , Checking modulating piston movement sender and metering adjuster

V.A.G 1551 print-out	Possible causes of fault	Possible effects	Fault remedy
17970P1562 Metering adjuster -N146 Upper stop value	- Upper stop value attained N146 defective/blocked	- Reduced output Jerking	- Check N146 =>Page 101 , Checking modulating piston movement sender and metering adjuster
17971P1563 Metering adjuster -N146 Lower stop value	- Lower stop value attained N146 defective/blocked	- Black smoke Rough idling	- Check N146 =>Page 101 , Checking modulating piston movement sender and metering adjuster

V.A.G 1551 print-out	Possible causes of fault	Possible effects	Fault remedy
17978P1570			

Protected by copyright. Copying for private or commercial purposes, in part or in whole, is not permitted unless authorised by Volkswagen AG. Volkswagen AG does not guarantee or accept any liability with respect to the correctness of information in this document. Copyright by Volkswagen AG.
satelettronica

V.A.G 1551 print-out	Possible causes of fault	Possible effects	Fault remedy
Engine control unit blocked	- Start attempted with an unauthorised key. - Attempted manipulation - Short in communication wire - Incorrect coding - Fault in immobilizer system - Immobilizer control unit defective/missing - Engine control unit has been replaced and not adapted to the immobilizer.	- Engine starts briefly and then stops again - Glow period warning lamp flashes	- Adapt engine control unit to electronic immobilizer => Page 132 Check electronic immobilizer: => Electrical system; Repair group 96; Electronic immobilizer

V.A.G 1551 print-out	Possible causes of fault	Possible effects	Fault remedy
18008P1600 Voltage supply terminal 15 Voltage too low	- No voltage supply when ignition is on (terminal 15)	- Various running problems including engine will not run	- Check voltage supply for diesel direct injection system control unit =>Page 87
18009P1601 Terminal 30 voltage supply relay - J317 Implausible signal	- Terminal 30 voltage supply relay (J317) defective - Relay sticks (sporadically)	- Engine does not start - Various running problems including engine will not run	- Check voltage supply for diesel direct injection system control unit =>Page 87

V.A.G 1551 print-out	Possible causes of fault	Possible effects	Fault remedy
18020P1612 Engine control unit Incorrectly coded	- Invalid control unit coding	- Glow period warning lamp flashes	- Code control unit =>Page 130
18026P1618 Glow plug relay -J52 Short to positive	- Wiring short to positive - J52 defective	- No glow period - Poor cold starting - Glow period warning lamp (K29) flashes	- Check J52 =>Page 24 , Final control diagnosis

V.A.G 1551 print-out	Possible causes of fault	Possible effects	Fault remedy
18027P1619 Glow plug relay -J52 Open circuit/short to earth	- Wiring open circuit or short to earth - J52 defective	- No glow period - Poor cold starting - Glow period warning lamp (K29) flashes	- Check J52 => Page 24 , Final control diagnosis
18039P1631 Accelerator position sender - G79			

satelettronica

V.A.G 1551 print-out	Possible causes of fault	Possible effects	Fault remedy
Signal too high	- G79 defective	- Increased idling speed	- Check G79 => Repair group 20; Removing and installing parts of fuel supply system; Servicing accelerator mechanism Servicing accelerator mechanism

V.A.G 1551 print-out	Possible causes of fault	Possible effects	Fault remedy
18040P1632 Accelerator position sender -G79 Voltage supply	- Wiring open circuit - Operating voltage too high or too low	- Glow period warning lamp flashes - Increased idling speed	- Check G79 => Repair group 20; Removing and installing parts of fuel supply system; Checking accelerator pedal position sender Checking accelerator pedal position sender
18047P1639 Accelerator position sender 1/2 -G79+G1851) Implausible signal	- G79 defective	- Increased idling speed	- Check G79 => Repair group 20; Removing and installing parts of fuel supply system; Checking accelerator pedal position sender Checking accelerator pedal position sender

1) Incorrect fault text display. Display must indicate:

Accelerator pedal position sender -G79

implausible signal

V.A.G 1551 print-out	Possible causes of fault	Possible effects	Fault remedy
18048P1640 Control unit defective	- Control unit (J248) internally defective	- Various running problems - Engine stops	- Replace J248 =>Page 130
18057P1649 Drive train data bus No message from ABS control unit	- Fault in data wiring to ABS control unit	- No electronic stability control - No TCS function - No EBC function	- Check data bus wiring to engine control unit (pins 68 + 75) for open circuit or short circuit using current flow diagram: => Current flow diagrams, Electrical fault finding and Fitting locations

V.A.G 1551 print-out	Possible causes of fault	Possible effects	Fault remedy
18065P1657			

Protected by copyright. Copyright for private or commercial purposes, in part or in whole, is not permitted unless authorised by Volkswagen AG. Volkswagen AG does not guarantee or accept any liability with respect to the correctness of information in this document. Copyright by Volkswagen AG.

satelettronica

V.A.G 1551 print-out	Possible causes of fault	Possible effects	Fault remedy
Air conditioner input/output Short to positive	- Wiring short to positive	- Vehicle acceleration reduced when air conditioner is switched on	- Check air conditioner compressor interruption =>Page 24 , Final control diagnosis
18262P1854 Data bus drive, Defective hardware	- Fault in data bus wiring to ABS control unit	- No electronic stability control - No TCS function - No EBC function	- Check data bus wiring to engine control unit (pins 68 + 75) for open circuit or short circuit using current flow diagram => Current flow diagrams, Electrical fault finding and Fitting locations

V.A.G 1551 print-out	Possible causes of fault	Possible effects	Fault remedy
19459P3003 Low heat output relay -J359 Short to positive	- Wiring open circuit or short to positive - J359 defective	- Engine preheating not functioning	- Check J359 =>Page 24 , Final control diagnosis
19461P3005 High heat output relay -J360 Short to positive	- Wiring open circuit or short to positive - J360 defective	- Engine preheating not functioning	- Check J360 =>Page 24 , Final control diagnosis

V.A.G 1551 print-out	Possible causes of fault	Possible effects	Fault remedy
19560P3104 Intake manifold flap change-over valve -N239 Short to positive	- Wiring short to positive - N239 defective/ sticks in open position	- Cold start problems - Cold idling problems - Hard load changes - Idling problems	Engine codes AGP, AQM: Check N239=>Page 24 , Final control diagnosis Engine codes AGR, ALH, ASV: Check N239 =>Page 114

V.A.G 1551 print-out	Possible causes of fault	Possible effects	Fault remedy
19561P3105 Intake manifold flap change-over valve -N239 Open circuit/short to earth	- Wiring open circuit or short to earth - N239 defective	- Cold start problems - Cold idling problems - Hard load changes - Idling problems	Engine codes AGP, AQM: Check N239 =>Page 24 , Final control diagnosis

satelettronica

			Engine codes AGR, ALH, ASV: Check N239 =>Page 114

3 - Final control diagnosis

3.1 - Final control diagnosis

3.2 - Performing final control diagnosis

The final control diagnosis actuates the following components in in the order listed below:

Engine codes AGP, AQM, AYQ

Engine codes AGR, ALH, ASV
=> Page 24 .

1. Commencement of injection valve (N108)

2. Exhaust gas recirculation valve (N18)

3. Conditioner compressor interruption

Engine codes AGP, AQM:

4. Intake manifold flap change-over valve (N239)

Engine code AYQ:

4. Intake manifold flap motor (V157)

Continued for all engine codes

5. Fuel shut-off valve (N109)

6. Glow plug relay (J52)

7. Glow period warning lamp (K29)

8. Low heat output relay (J359)
   (Vehicles with accessories only)

9. High heat output relay (J360)
   (Vehicles with accessories only)

Engine codes AGR, ALH, ASV

1. Commencement of injection valve (N108)

2. Exhaust gas recirculation valve (N18)

3. Conditioner compressor interruption

4. Fuel shut-off valve (N109)

Protected by copyright. Copying for private or commercial purposes, in part or in whole, is not permitted unless authorised by Volkswagen AG. Volkswagen AG does not guarantee or accept any liability with respect to the correctness of information in this document. Copyright by Volkswagen AG.

satelettronica

5. Charge pressure control solenoid valve (N75)

6. Glow plug relay (J52)

7. Glow period warning lamp (K29)

8. Low heat output relay (J359)
   (Vehicles with accessories only)

9. High heat output relay (J360)
   (Vehicles with accessories only)

10. Blower relay (J323)
    (only engines with engine code ASV)

Continued for all engine codes

Notes:

- During the final control diagnosis, the individual final controls will be activated for approx. 30 seconds or until the next final control is activated by the pressing of the ⇒ button.
- The ignition must be switched off before repeating the final control diagnosis.

Special tools, workshop equipment, testers, measuring instruments and auxiliary items required

- Fault reader V.A.G 1551 (or vehicle system tester V.A.G 1552) with cable V.A.G 1551/3

Check conditions

- The fuses must be OK.
- Strip fuses in fuse holder on battery OK.
- The battery voltage must be at least 11.5 V.
- Earth connection in plenum chamber OK.
- All electrical consumers, e.g. lights and rear window heating must be switched off.

Test requirements for vehicles with air conditioning system

- Vehicle at room temperature (warmer than + 15 °C).
- Air conditioning system switched on
- Select lowest temperature and highest blower speed

Work sequence

- Connect fault reader V.A.G 1551 (V.A.G 1552) and select engine electronics control unit with the "Address word" 01. When doing this the engine must be running at idling speed.
  (Connecting fault reader and selecting engine electronics control unit => Page 2 .)

-> Indicated on display:

```
Rapid data transfer     HELP
Select function XX
```

- Operate fault reader taking into account the information on the display:
- Press keys 0 and 3 for the function "Final control diagnosis".

-> Indicated on display:

```
Rapid data transfer     Q
03 Final control diagnosis
```

- Confirm input with Q key.

-> Indicated on display:

```
Final control diagnosis
Commencement of injection valve -N108
```

Copyright by Volkswagen AG. Volkswagen AG does not guarantee or accept any liability with respect to the correctness of information in this document. Copyright by Volkswagen AG. Printed by copyright. Copy or commercial purposes, in part or in whole, is not permitted unless authorised by Volkswagen AG.
satelettronica

Activating the valve, influences the noise of combustion considerably (pre-ignition).

If no changes in the combustion noises are heard:

- Check injection timing regulation range => Page 107
- Press the ⇒key.

-> Indicated on display:

```
Final control diagnosis
Exhaust gas recirculation valve -N18
```

The valve must click.

Note:

Because the clicking of the valve is not audible over the engine noise, it can only be checked by feel.

Valve does not click:

- Check EGR valve (N18):

=> Repair group 26; Exhaust gas recirculation system Exhaust gas recirculation system

- Press the ⇒key.

-> Indicated on display:

```
Final control diagnosis
Conditioner compressor interruption
```

Air conditioner compressor switch-off is checked.
The test step is also called on vehicles without air conditioner system.
The air conditioner compressor must stop within 5 seconds (visual check) then start about every 5 seconds and then stop.

If the conditioner compressor is not switched off:

- Check signals from/to air conditioning system
  => Page 126
- Press the ⇒key.

Engine codes AGP, AQM, AYQ

Engine codes AGR, ALH, ASV
=> Page 27 .

-> Indicated on display:

```
Final control diagnosis
Intake manif. flap change-over valve -
N239
```

The valve must click.
Activating the intake manifold flap change-over valve changes the sound of the air intake. (The change-over valve opens and closes the intake manifold flap.)

If the valve does not click:

- Check intake manifold flap change-over
  =>Page 112 .
- Check intake manifold flap change-over valve
  =>Page 114 .

-> Indicated on display for engine code AYQ:

Protected by copyright. Copyright by Volkswagen AG.
Volkswagen AG. Volkswagen AG does not guarantee or accept any liability with respect to the correctness of information in this document. Copyright by Volkswagen AG.
satelettronica

```
Final control diagnosis
Intake manifold flap motor -V157
```

Activating the intake manifold flap motor changes the combustion noise (the positioning motor opens and closes the intake manifold flap).

If no changes to combustion noises can be heard:

- Check intake manifold flap motor (V157) => Page 117 .
- Press the ⇒key.

-> Indicated on display:

```
Final control diagnosis
Fuel shut-off valve -N109
```

The engine must stop.

If the engine does not stop:

- Switch off ignition.
- Unscrew fuel shut-off valve and remove any metal particles or dirt.
- Repeat final control diagnosis. If the engine will not stop, replace fuel shut-off valve => Page 62 , item 7 .
- Continue final control diagnosis with engine stopped and ignition switched on.
- Press the ⇒key.

Engine codes AGR, ALH, ASV

Continued for all engine codes
=> Page 28 .

-> Indicated on display:

```
Final control diagnosis
Fuel shut-off valve -N109
```

The engine must stop.

If the engine does not stop:

- Switch off ignition.
- Unscrew fuel shut-off valve and remove any metal particles or dirt.
- Repeat final control diagnosis. If the engine will not stop, replace fuel shut-off valve => Page 62 , item 7 .
- Continue final control diagnosis with engine stopped and ignition switched on.
- Press the ⇒key.

-> Indicated on display:

```
Final control diagnosis
Charge pressure control solenoid valve -
N75
```

The solenoid valve must click.

Note:

The clicking of the valve is difficult to hear and is therefore best checked by touch.

If the solenoid valve does not click:

- Check charge pressure control solenoid valve (N75)

Protected by copyright. Copying for private or commercial purposes, in part or in whole, is not permitted unless authorised by Volkswagen AG. Volkswagen AG does not guarantee or accept any liability with respect to the correctness of information in this document. Copyright by Volkswagen AG.
satelettronica

=> Repair group 21; Checking charge pressure system; Checking charge pressure control. Checking charge pressure system Checking charge pressure control.

- Press the ⇒key.

Continued for all engine codes

-> Indicated on display:

```
Final control diagnosis
Glow plug relay -J52
```

The relay must click.
Switching on and off the relay can also be observed as the interior light becomes brighter and darker as a result of the glow plug high power consumption.

If the relay does not click:

- Check glow plug relay:

=> Current flow diagrams, Electrical fault finding and Fitting locations

- Press the ⇒key.

-> Indicated on display:

```
Final control diagnosis
Glow period warning lamp -K29
```

The control lamp must flash.

Control lamp does not flash:

- Check glow period warning lamp:

=> Current flow diagrams, Electrical fault finding and Fitting locations

- Press the ⇒key.

-> Indicated on display:

```
Final control diagnosis
Low heater output relay -J359
```

The relay must click.

If the relay does not click:

- Check low heater output relay:

=> Current flow diagrams, Electrical fault finding and Fitting locations

- Press the ⇒key.

-> Indicated on display:

```
Final control diagnosis
High heater output relay -J360
```

The relay must click.

If the relay does not click:

- Check high heat output relay:

Protected by copyright. Copying for private or commercial purposes, in part or in whole, is not permitted unless authorised by Volkswagen AG. Volkswagen AG does not guarantee or accept any liability with respect to the correctness of information in this document. Copyright by Volkswagen AG.
satelettronica

=> Current flow diagrams, Electrical fault finding and Fitting locations

- Press the ⇒key.

Engine code ASV

-> Indicated on display:

```
Final control diagnosis
Blower relay -J323
```

The fan must start every 5 seconds and then stop again.

If the fan does not run:

- Check the fan relay:

=> Current flow diagrams, Electrical fault finding and Fitting locations

Continuation for all vehicles

- Press the ⇒key.

-> Indicated on display:

```
Rapid data transfer     HELP
Select function XX
```

- Press keys 0 and 6 for the "End output" function and confirm input with the Q key.
- Switch off ignition.

4 - Measured value blocks

4.1 - Measured value blocks

4.2 - Safety precautions

Observe following if test and measuring instruments are required during a test drive:

- Test and measuring instruments must be secured to rear seat and operated by a 2nd person from this location.

  If test and measuring instruments are operated from front passenger's seat and the vehicle is involved in an accident, there is a possibility that the person sitting in this seat may receive serious injuries when the airbag is triggered.

4.3 - Reading measured value block

Special tools, workshop equipment, testers, measuring instruments and auxiliary items required

- Fault reader V.A.G 1551 (or vehicle system tester V.A.G 1552) with cable V.A.G 1551/3

Test conditions

- The fuses must be OK.
- Strip fuses in fuse holder on battery OK.
- The battery voltage must be at least 11.5 V.
- Earth connection in plenum chamber OK.

Copyright. Copyright protected by Volkswagen AG. Volkswagen AG does not guarantee or accept any liability with respect to the correctness of information in this document. Copyright by Volkswagen AG. Reproduction, in whole or in part, is not permitted unless authorised by Volkswagen AG. Volkswagen AG does not guarantee or accept any liability with respect to the correctness of information in this document. Copyright by Volkswagen AG.
satelettronica

- Earth connection between engine (on gearbox bell housing) and body (below battery) OK.
- All electrical consumers like e.g. rear window heating must be switched off.
- If the vehicle is equipped with an air conditioner, this must be switched off.
- No faults must be stored in fault memory
  => Page 6 , interrogating fault memory
- Coolant temperature must be at least 80 °C, =>Display group 001, display zone 4.

Work sequence

- Connect fault reader V.A.G 1551 (V.A.G 1552) and select engine electronics control unit with the "Address word" 01. When doing this the engine must be running at idling speed.
  (Connecting fault reader and selecting engine electronics control unit => Page 2 .)

-> Indicated on display:

```
Rapid data transfer      HELP
Select function XX
```

- Press keys 0 and 8 for the function "Read measured value block" and confirm entry with Q key.

-> Indicated on display:

```
Read measured value block
Input display group number XXX
```

Note:

The display group number 001 is an example, to illustrate the sequence.

- Press keys 0, 0 and 1 for "Display group number 1" and confirm entry with Q key.

-> Indicated on display:
(1...4 = Display zones)

```
Read measured value block 1
     1     2     3     4
```

Note:

To change to another display group proceed as follows:

Display group	V.A.G 1551	V.A.G 1552
Higher	Press key 3	Press ↑key
Lower	Press key 1	Press ↓key
Skip	Press key C	Press key C

- If the specifications in all display zones are obtained, press ⇒key.

-> Indicated on display:

```
Rapid data transfer      HELP
Select function XX
```

- Press keys 0 and 6 for the function "End output" and confirm entry with the Q key.
- Switch off ignition.

4.4 - Evaluating measured value blocks

Display group 000 at idling speed (engine warm, coolant temperature not below 80 °C)

Display group 000 (decimal value displayed) for engine codes AGP, AQM, AYQ
▪ Engine running at idling speed

Protected by copyright. Copyright by Volkswagen AG. Copyright by Volkswagen AG does not guarantee or accept any liability with respect to the correctness of information in this document. Copying for private or commercial purposes, in whole or in part, is not permitted unless authorised by Volkswagen AG.
satelettronica

Display group 000 (decimal value displayed) for engine codes AGP, AQM, AYQ			
Read measured value block 0	◂ Indicated on display		
x x x x x x x x x x	◂ Display zones	Specification	Corresponds to
	Displayed value not relevant	disregard	---
	Fuel temperature	91...201	20...80°C
	Intake manifold temperature	190...51	5...100°C
	Coolant temperature	80...35	80...110°C
	Atmospheric pressure (air pressure)	181...222	900...1100 mbar
	Displayed value not relevant	disregard	---
	Injected quantity	15...45	3.0...9.0 mg/H
	Accelerator pedal position	0	0 %
	Commencement of injection	38...88	0°...4°BTDC
	Engine speed	41...45	860..950 rpm

Display group 000 (decimal value displayed) for engine codes AGR, ALH			
▪ Engine running at idling speed			
Read measured value block 0	◂ Indicated on display		
x x x x x x x x x x	◂ Display zones	Specification	Corresponds to
	Air mass1) Engine code AGR Engine code ALH	69...128 60...117	230...420 mg/H 200...390 mg/H
	Fuel temperature	91...201	20...80°C
	Intake manifold temperature	182...51	10...100°C
	Coolant temperature	80...35	80...110°C
	Atmospheric pressure (air pressure)	181...222	900...1100 mbar
	Intake manifold pressure (charge pressure)	82...102	900...1100 mbar
	Injected quantity	15...45	3.0...9.0 mg/H
	Accelerator pedal position	0	0 %
	Commencement of injection	38...100	0°...5°BTDC
	Engine speed	41...45	860..950 rpm

1) The measured values are only valid when the exhaust gas recirculation (EGR) is switched on. When the engine is idling the EGR is switched off after approx. 2 minutes, therefore give burst on throttle or restart engine.

Display group 000 (decimal value displayed) for engine code ASV			
▪ Engine running at idling speed			
Read measured value block 0	◂ Indicated on display		
x x x x x x x x x x	◂ Display zones	Specification	Corresponds to
	Air mass1)	62...128	210...420 mg/H
	Fuel temperature	91...201	20...80°C
	Intake manifold temperature	182...51	10...100°C
	Coolant temperature	80...35	80...110°C
	Atmospheric pressure (air pressure)	181...222	900...1100 mbar
	Intake manifold pressure (charge pressure)	82...102	900...1100 mbar
	Injected quantity	15...45	3.0...9.0 mg/H
	Accelerator pedal position	0	0 %

satelettronica

Display group 000 (decimal value displayed) for engine code ASV		
Commencement of injection	38...75	0°...3°BTDC
Engine speed	41...45	860..950 rpm

1) The measured values are only valid when the exhaust gas recirculation (EGR) is switched on. When the engine is idling the EGR is switched off after approx. 2 minutes, therefore give burst on throttle or restart engine.

Display group 001 at idling speed (engine warm, coolant temperature not below 80 °C)

Display group 001 -Injected quantity-						
▪ Engine running at idling speed						
Read measured value block 1 ⇒				◂ Indicated on display		
xxxx rpm	xx.x mg/H	x.xxx V	xxx.x °C	◂ Display zones	Specification	Evaluation
1	2	3	4	Coolant temperature	80.0...110.0 °C	---
				Voltage from modulating piston movement sender: Engine codes AGP, AQM Engine codes AGR, ALH Engine code ASV Engine codeAYQ	1.600...2.100 V 1.300...2.000 V 1.300...1.900 V 1.400...2.000 V	=> Page 32
				Injected quantity	3.0...9.0 mg/H	=> Page 32
				Engine speed	860...950 rpm	---

Evaluation: Display group 1, display zone 2 - Injected quantity

V.A.G 1551 display	Possible fault cause	Fault elimination
Below specification	- Injection pump too rich	- Renew injection pump => Page 76
Above specification	- Engine too cold - Injection pump too lean	- Run engine at increased speed to warm up and repeat check - Renew injection pump => Page 76

Evaluation: Display group 1, display zone 3 - Modulating piston movement sender voltage

V.A.G 1551 display	Possible fault cause	Fault elimination
Below specification	- Injection pump too rich	- Renew injection pump => Page 76
Above specification	- Engine too cold - Injection pump too lean	- Run engine at increased speed to warm up and repeat check - Renew injection pump => Page 76

Display group 002 at idling speed (engine warm, coolant temperature not below 80 °C)

Display group 002 -Idling speed-						
▪ Engine running at idling speed						
Read measured value block 2 ⇒				◂ Indicated on display		
xxxx rpm	xxx.x %	x x x	xxx.x °C	◂ Display zones	Specification	Evaluation
1	2	3	4	Coolant temperature	80.0...110.0 °C	---
				Operating condition	0 1 0	=> Page 33

Protected by copyright. Copyright by Volkswagen AG.
Volkswagen AG does not guarantee or accept any liability with respect to the correctness of information in this document. Copyright by Volkswagen AG.
satelettronica

	Accelerator pedal position	0.0 %	=> Page 33
	Engine speed	860...950 rpm	---

Evaluation: Display group 2, display zone 2 - Accelerator pedal position

V.A.G 1551 display	Possible fault cause	Fault elimination
1.0...100.0 %	- Accelerator pedal position sender -G79 defective - Wiring open circuit to G79	- Check -G79 => Repair group 20; Removing and installing parts of fuel system; Checking accelerator pedal position sender Checking accelerator pedal position sender

Evaluation: Display group 2, display zone 3 - Operating condition

Note:

Significance of figures in 3-digit number block for engine operating condition:

Significance when display = 1			
x	x	x	Engine operating condition
		1	Air conditioner compressor switched on
	1		Idling switch closed
1			Increased idling speed because air conditioner is switched on

Display group 003 at idling speed (engine warm, coolant temperature not below 80 °C)

Display group 003 -Exhaust gas recirculation-

- Engine running at idling speed

Read measured value block 3 ⇒ ◂ Indicated on display

1	2	3	4			
xxxx rpm	xxx mg/H	xxx mg/H	xxx %	◂ Display zones	Specification	Evaluation
			4	Duty cycle from EGR valve: Engine codes AGP, AQM, AYQ Engine codes AGR, ALH, ASV	94...96 % 30...80 %	--- ---
		3		Air mass drawn in (actual): Engine code AGR Engine code ALH Engine code ASV	230...420 mg/H 200...390 mg/H 210...420 mg/H	=> Page 34
	2			Air mass drawn in (specified): Engine code AGR Engine code ALH Engine code ASV	230...390 mg/H 200...370 mg/H 210...370 mg/H	=> Page 33
1				Engine speed	860...950 rpm	---

Evaluation: Display group 3, display zone 2 - Air mass drawn in (specified)

V.A.G 1551 display	Possible fault cause	Fault elimination
Above specification	- Engine too cold	- Run engine at increased speed to warm up and repeat check

Protected by copyright. Copying for private or commercial purposes, in part or whole, is not permitted unless authorised by Volkswagen AG. Volkswagen AG does not guarantee or accept any liability with respect to the correctness of information in this document. Copyright by Volkswagen AG.

sateletronica

Evaluation: Display group 3, display zone 3 - Air mass drawn in (actual)

V.A.G 1551 display	Possible fault cause	Fault elimination
Below specification	- Excessive exhaust gas recirculation	- Check exhaust gas recirculation => Repair group 26; Exhaust gas recirculation system; Checking exhaust gas recirculation Checking exhaust gas recirculation
	- Unmetered air	- Check intake air system for leaks.
Above specification	- Engine too cold	- Run engine at increased speed to warm up and repeat check
	- Insufficient exhaust gas recirculation	- Engine running at idling speed for more than 2 minutes; give burst on throttle
	- Air mass meter -G70 defective	- Check air mass meter => Page 109 If a fault is present, the measured value block indicates a constant air mass value of approx. 550 mg/H over the complete engine speed and load range.

Display group 004 at idling speed (engine warm, coolant temperature not below 80 °C)

Display group 004 -Commencement of injection-						
▪ Engine running at idling speed						
Read measured value block 4 ⇒				◂ Indicated on display		
xxxx rpm	xx.x ° B/ATDC	xx.x ° B/ATDC	xxx %			
1	2	3	4	◂ Display zones	Specification	Evaluation
				Commencement of injection valve duty cycle	2...80 %	---
			Commencement of injection (actual)		about commencement of injection (specified)	=> Page 34
		Commencement of injection (specified) Engine codes AGP, AQM Engine codes AGR, ALH Engine codes ASV, AYQ			0.0°...4.0°BTDC 0.0°...5.0°BTDC 0.0°...3.0°BTDC	=> Page 34
	Engine speed				860...950 rpm	---

Evaluation: Display group 4, display zone 2 - Commencement of injection (specified)

V.A.G 1551 display	Possible fault cause	Fault elimination
Above specification	- Engine too cold	- Run engine at increased speed to warm up and repeat check

Evaluation: Display group 4, display zone 3 - Commencement of injection (actual)

V.A.G 1551 display	Possible fault cause	Fault elimination
Above specification	- Engine too cold	- Run engine at increased speed to warm up and repeat check
	- Injection pump set too "advanced"	- Check and adjust commencement of injection dynamically => Page 81
	- Commencement of injection valve -N108 defective	- Check -N108 => Page 24 , Final control diagnosis

Volkswagen AG does not guarantee the accuracy of this document, nor does it accept liability with respect to the consequences of information in this document. Copyright. Protected by copyright. Copying for private or commercial purposes, in part or in whole, is not permitted unless authorised by Volkswagen AG.
satelettronica

V.A.G 1551 display	Possible fault cause	Fault elimination
Below specification	- Injection pump set extremely "retarded"	- Check and adjust commencement of injection dynamically => Page 81
	- Commencement of injection valve -N108 defective - Injection adjustment blocked	- Check -N108 => Page 24 , Final control diagnosis

Display group 005

Note:

The values displayed are not relevant for fault finding within the service department.

Display group 005 -Starting conditions-						
Read measured value block 5			⇒	◂ Indicated on display		
xxxx rpm	xx.x mg/H	xx.x ° B/ATDC	xxx.x °C			
1	2	3	4	◂ Display zones	Specification	Evaluation
				Coolant temperature	---	---
			Commencement of injection (actual)		---	---
		Starting quantity			---	---
	Engine speed				---	---

Display group 006 with ignition switched on

Display group 006 -Switch positions-						
▪ Ignition on, engine not running						
Read measured value block 6			⇒	◂ Indicated on display		
xxx km/h	x x x	xxxxxx	xxx			
1	2	3	4	◂ Display zones	Specification	Evaluation
				Cruise control system1)	255	---
			Cruise control system		000000	=> Page 36
		Clutch and brake pedal monitoring			0 0 0	=> Page 35
	Speed				0 km/h	---

1) 0 = Vehicles with cruise control system, cruise control system switched off

1 = Vehicles with cruise control system, cruise control system switched on

255 = Vehicles without cruise control system

Evaluation: Display group 6, display zone 2 -Clutch and brake pedal monitoring

Note:

Significance of figures in 3-digit number block for clutch and brake pedal monitoring:

Significance when display = 1			
x	x	x	Clutch and brake pedal monitoring
		1	Brake light switch -F closed
	1		Brake pedal switch -F-47 open

Copyright by Volkswagen AG. Volkswagen AG does not guarantee or accept any liability with respect to the correctness of information in this document. Copyright by Volkswagen AG. Commercial purposes or in whole or in part is not permitted unless authorised by Volkswagen AG.
satelettronica

Significance when display = 1			
1			Clutch pedal switch -F36 open

Evaluation: Display group 6, display zone 3 - Cruise control system display

Note:

Significance of figures in 6-digit number block for cruise control system:

Meaning when display position = 1						
x	x	x	x	x	x	Cruise control system
					1	Cruise control system switched on
				1		Cruise control and memory switched off
			1			Speed retardation
		1				Resume/acceleration
	1					Brake pedal operated
1						Clutch pedal operated

Display group 007 with ignition switched on (engine cold and not running)

Display group 007 -Temperatures-						
▪ Ignition on, engine not running						
Read measured value block 7 ⇒				◂ Indicated on display		
xxx.x °C		xxx.x °C	xxx.x °C			
1	2	3	4	◂ Display zones	Specification	Evaluation
				Coolant temperature	Approx. ambient temperature1)	=> Page 37
			Intake manifold temperature		Approx. ambient temperature1)	=> Page 37
	Fuel temperature				Approx. ambient temperature1)	=> Page 36

1) Details of temperature specifications are not possible. When the engine is cold the fuel, intake air and coolant temperatures must equate approximately to ambient temperature. If a temperature deviates noticeably then the relevant sender must be checked.

Evaluation: Display group 7, display zone 1 - Fuel temperature display

V.A.G 1551 display	Possible fault cause	Fault elimination
- 5.4 °C	- Short circuit or fuel temperature sender - G81 defective	- Check -G81 => Page 99 If a fault is present, the measured value block indicates a fuel temperature of -5.4 °C

Protected by copyright. Copyright by Volkswagen AG. Volkswagen AG does not guarantee or accept any liability with respect to the correctness of information in this document. Copyright by Volkswagen AG. Reproduction is not permitted unless authorised by Volkswagen AG.
satelettronica

Evaluation: Display group 7, display zone 3 - Intake manifold temperature

V.A.G 1551 display	Possible fault cause	Fault elimination
Approx.136.8 °C	- Intake manifold temperature sender -G72 defective	- Check -G72 => Page 95 If a fault is present, the measured value block indicates a constant intake manifold or intake air temperature of approx.136.8 °C

Evaluation: Display group 7, display zone 4 - Coolant temperature

V.A.G 1551 display	Possible fault cause	Fault elimination
Large deviation from ambient temperature	- Short circuit or coolant temperature sender -G62 defective	- Check -G62 => Page 92 If a fault is present, the fuel temperature is displayed instead

4.5 - Display group 009

Note:

The values displayed are not relevant for fault finding within the service department.

Display group 009 -Injected quantity limitation-						
Read measured value block 9			⇒	◂ Indicated on display		
xxxx rpm xx.x mg/H		xx.x mg/H				
1	2	3	4	◂ Display zones	Specification	Evaluation
			Injected quantity limitation from automatic gearbox during gear change		---	---
		Injected quantity (cruise control system active)			---	---
	Engine speed				---	---

Display group 012

Note:

The values displayed are not relevant for fault finding within the service department.

Display group 012 -Glow plug system-						
Read measured value block 12			⇒	◂ Indicated on display		
xxxxxxxx	xx.xx	xx.x V	xxx.x °C			
1	2	3	4	◂ Display zones	Specification	Evaluation
				Coolant temperature	---	---
			Supply voltage from control unit		---	---
		Pre-glow period			---	---
	Pre-glow period system status					

satelettronica

Display group 013 at idling speed (engine warm, coolant temperature not below 80 °C)

Display group 014 -Smooth idling speed control-						
▪ Engine running at idling speed						
Read measured value block 13			⇒	◂ Indicated on display		
x.xx mg/H	x.xx mg/H	x.xx mg/H	x.xx mg/H			
1	2	3	4	◂ Display zones	Specification	Evaluation
				Smooth running control injected quantity Cyl. 4	- 1.90...+ 1.90 mg/H	=> Page 38
			Smooth running control injected quantity Cyl. 3		- 1.90...+ 1.90 mg/H	=> Page 38
		Smooth running control injected quantity Cyl. 2			- 1.90...+ 1.90 mg/H	=> Page 38
	Smooth running control injected quantity Cyl. 1				- 1.90...+ 1.90 mg/H	=> Page 38

Evaluation: Display group 13, display zones 1...4 - Idling speed smooth running control

The injection system is equipped with an idling speed smooth running control. There may be power differences between the individual cylinders (component tolerances, injector delivery, compressions etc.) which are recognised and equalized via selective injected quantities.
Recognition at idling speed is via the signal from the engine speed sender which delivers four signals per crankshaft revolution to the control unit. If the signals are delivered at the same rhythm then all cylinders work the same. If one cylinder is weaker then the crankshaft takes longer for the next half revolution. Conversely a more powerful cylinder accelerates the crankshaft so less time is taken.
If the control unit recognises a difference, then the relevant cylinder is given more or less fuel, until the engine runs evenly again.
+... mg/H: The respective cylinder is less powerful and is therefore supplied with more fuel.
-... mg/H: The respective cylinder is more powerful and is therefore supplied with less fuel.

Display group 015

Note:

The values displayed are not relevant for fault finding within the service department.

Display group 015 -Fuel consumption-						
Read measured value block 15			⇒	◂ Indicated on display		
xxxx rpm	xx.x mg/H	xx.xx l/h	xx.x mg/H			
1	2	3	4	◂ Display zones	Specification	Evaluation
				Injection qty. requirement (driver's requirement via accelerator pedal)	---	---
			Fuel consumption		---	---
		Injection quantity (actual)			---	---
	Engine speed				---	---

Display group 016 at idling

Display group 016 -Additional heater-						
▪ Engine running at idling speed						
Read measured value block 16			⇒	◂ Indicated on display		
xxx %	xxxxxxxx	xx	xx.x V			
1	2	3	4	◂ Display zones	Specification	Evaluation
				Voltage supply from control unit	12.5...14.5 V	---

satelettronica

		Activation of heater elements		=> Page 39
		Additional heater		=> Page 39
	Alternator loading		---	---

Evaluation: Display group 16, display zone 2 - Additional heater

Note:

Significance of figures in 8-digit number block for additional heater:

Meaning when display position = 1								
x	x	x	x	x	x	x	x	Additional heater switched off, because:
							1	Coolant temperature above 70 °C...80 °C or intake air temperature above + 5 °C
						1		Alternator defective
					1			Battery voltage below 9 V
				1				Engine speed below 875 rpm
			1					Engine start within last 10 seconds
		1						Coolant temperature sender -G62 or intake manifold temperature sender -G72 defective
	1							Not relevant
1								Not relevant

Evaluation: Display group 16, display zone 3 - Heater element activation

Note:

Significance of figures in 2-digit number block for heater element activation:

Significance when display = 1		
x	x	Heater element activation
	1	Low heat output relay -J359 on
1		High heat output relay -J360 on

Display group 019 at idling

Display group 019 -Quantity adjuster-						
▪ Engine running at idling speed Read measured value block 19			⇒	◂ Indicated on display		
x.xxx V	x.xxx V					
1	2	3	4	◂ Display zones	Specification	Evaluation
		Voltage from modulating piston movement sender (start position stop)			4.150...4.740 V	=> Page 40
	Voltage from modulating piston movement sender (stop position stop)				0.500...0.970 V	=> Page 40

Protected by copyright. Copyright by Volkswagen AG. Volkswagen AG does not guarantee or accept any liability with respect to the correctness of information in this document. Copyright by Volkswagen AG. Reproduction, in part or in whole, is not permitted without authorisation by Volkswagen AG.
satelettronica

Evaluation: Display group 19, display zones 1 and 2 - Modulating piston movement sender voltage (start- and stop-position stops)

V.A.G 1551 display	Possible fault cause	Fault elimination
Specification outside tolerance	- Injection pump quantity adjuster incorrectly set	- Renew injection pump => Page 76

Display group 000 at full throttle (test drive in 3rd gear, coolant temperature not below 80 °C)

Notes:

- When testing, accelerate vehicle at full throttle.
- The measured values must be printed out or read (2nd person required) when the revolutions reach 3,000 rpm.

Display group 000 (decimal value displayed) for engine codes AGP, AQM, AYQ

▪ Whilst driving

Read measured value block 0 ◂ Indicated on display

x 1	x 2	x 3	x 4	x 5	x 6	x 7	x 8	x 9	x 10	◂ Display zones	Specification	Corresponds to
										Displayed value not relevant	disregard	---
										Fuel temperature	91...201	20...80°C
										Intake manifold temperature	190...50	5...100°C
										Coolant temperature	80...35	80...110°C
										Atmospheric pressure (air pressure)	181...222	900...1100 mbar
										Displayed value not relevant	disregard	---
										Quantity injected	120...140	24.0...28.0 mg/H
										Accelerator pedal position	255	100 %
										Commencement of injection	100...188	5...12°BTDC
										Engine speed	133...153	2800..3200 rpm

Notes:

- When testing, accelerate vehicle at full throttle.
- The measured values must be printed out or read (2nd person required) when the revolutions reach 3,000 rpm.

Display group 000 (decimal value displayed) for engine codes AGR, ALH

▪ Whilst driving

Read measured value block 0 ◂ Indicated on display

x 1	x 2	x 3	x 4	x 5	x 6	x 7	x 8	x 9	x 10	◂ Display zones	Specification	Corresponds to
										Air mass	225...255	750...890 mg/H
										Fuel temperature	91...201	20...80°C
										Intake manifold temperature	182...50	10...110°C
										Coolant temperature	80...35	80...110°C
										Atmospheric pressure (air pressure)	181...222	900...1100 mbar
										Intake manifold pressure (charge pressure)	158...194	1650...2000 mbar
										Quantity injected	175...180	35.0...36.0 mg/H
										Accelerator pedal position	255	100 %

Copyright by Volkswagen AG. Volkswagen AG does not guarantee or accept any liability with respect to the correctness of information in this document. Copyright by Volkswagen AG. Copying for private or commercial purposes, in part or in whole, is not permitted unless authorised by Volkswagen AG.
satelettronica

Display group 000 (decimal value displayed) for engine codes AGR, ALH		
Commencement of injection	137...213	8...14°BTDC
Engine speed	133...153	2800..3200 rpm

Notes:

- When testing, accelerate vehicle at full throttle.
- The measured values must be printed out or read (2nd person required) when the revolutions reach 3,000 rpm.

Display group 000 (decimal value displayed) for engine code ASV

▪ Whilst driving

Read measured value block 0 ◂ Indicated on display

x	x	x	x	x	x	x	x	x	x	◂ Display zones	Specification	Corresponds to
1	2	3	4	5	6	7	8	9	10	Air mass	225...255	750...890 mg/H
										Fuel temperature	91...201	20...80°C
										Intake manifold temperature	182...50	10...110°C
										Coolant temperature	80...35	80...110°C
										Atmospheric pressure (air pressure)	181...222	900...1100 mbar
										Intake manifold pressure	158...204	1650...2100 mbar
										Quantity injected	200...215	40.0...43.0 mg/H
										Accelerator pedal position	255	100 %
										Commencement of injection	137...213	8...14°BTDC
										Engine speed	133...153	2800..3200 rpm

Display group 004 at full throttle (test drive in 3rd gear, coolant temperature not below 80 °C)

Notes:

- When testing, accelerate vehicle at full throttle.
- The measured values must be printed out or read (2nd person required) when the revolutions reach 3,000 rpm.

Display group 004 -Commencement of injection-

▪ Whilst driving

Read measured value block 4 ⇒ ◂ Indicated on display

xxxx rpm	xx.x ° B/ATDC	xx.x ° B/ATDC	xxx %	◂ Display zones	Specification	Evaluation
1	2	3	4	Commencement of injection valve duty cycle	70...95 %	=> Page 42
				Commencement of injection (actual)	Approx. com. of inj. (specified)	=> Page 42
				Commencement of injection (specified): Engine codes AGP, AQM, AYQ Engine codes AGR, ALH, ASV	5.0°...12.0°BTDC 8.0°...14.0°BTDC	---
				Engine speed	2800...3200 rpm	---

Protected by copyright. Copying for private or commercial purposes, in part or in whole, is not permitted unless authorised by Volkswagen AG. Volkswagen AG does not guarantee or accept any liability with respect to the correctness of information in this document. Copyright by Volkswagen AG.

satelettronica

Evaluation: Display group 4, display zone 3 - Commencement of injection (actual)

V.A.G 1551 display	Possible fault cause	Fault elimination
If large deviation from specified value (approx. 5°)	- Commencement of injection valve -N108 defective	- Check -N108 => Page 24 , Final control diagnosis
	- Injection pump timing way off	- Check commencement of injection dynamically and adjust => Page 81
	- Air in fuel system	- Check fuel supply system

Evaluation: Display group 4, display zone 4 - Duty cycle of commencement of injection valve

V.A.G 1551 display	Possible fault cause	Fault elimination
Specification outside tolerance	- Commencement of injection valve - N108 defective	- Check -N108 => Page 24 , Final control diagnosis
		- Check commencement of injection dynamically and adjust => Page 81
		- Check fuel supply system

Display group 008 at full throttle (test drive in 3rd gear, coolant temperature not below 80 °C)

Notes:

- When testing, accelerate vehicle at full throttle.
- The measured values must be printed out or read (2nd person required) when the revolutions reach 3,000 rpm.

Display group 008 -Injected quantity limitation- for engine codes AGP, AQM, AYQ						
▪ Whilst driving						
Read measured value block 8			⇒	◂ Indicated on display		
xxxx rpm xx.x mg/H xx.x mg/H xx.x mg/H						
1	2	3	4	◂ Display zones	Specification	Evaluation
				Injected quantity limitation due to air mass drawn in (smoke prevention)	24.0...28.0 mg/H	=> Page 44
			Injected quantity limitation via revs. (torque limitation)		25.0...28.0 mg/H	=> Page 43
		Injected quantity (driver's requirement)			41.0...45.0 mg/H	=> Page 43
	Engine speed				2800...3200 rpm	---

Notes:

- When testing, accelerate vehicle at full throttle.
- The measured values must be printed out or read (2nd person required) when the revolutions reach 3,000 rpm.

Display group 008 -Injected quantity limitation- for engine codes AGR, ALH		
▪ Whilst driving		
Read measured value block 8	⇒	◂ Indicated on display
xxxx rpm xx.x mg/H xx.x mg/H xx.x mg/H		

Protected by copyright. Copying for private or commercial purposes, in part or in whole, is not permitted unless authorised by Volkswagen AG. Volkswagen AG does not guarantee or accept any liability with respect to the correctness of information in this document. Copyright by Volkswagen AG.

satelettronica

1	2	3	4	◂ Display zones	Specification	Evaluation
				Injected quantity limitation due to air mass drawn in (smoke prevention)	35.0...38.0 mg/H	=> Page 44
			Injected quantity limitation via revs. (torque limitation)		35.0...36.0 mg/H	=> Page 43
		Injected quantity (driver's requirement)			38.0...42.0 mg/H	=> Page 43
	Engine speed				2800...3200 rpm	---

Notes:

- When testing, accelerate vehicle at full throttle.
- The measured values must be printed out or read (2nd person required) when the revolutions reach 3,000 rpm.

Display group 008 -Injected quantity limitation- for engine code ASV						
▪ Whilst driving Read measured value block 8 ⇒ xxxx rpm xx.x mg/H xx.x mg/H xx.x mg/H				◂ Indicated on display		
1	2	3	4	◂ Display zones	Specification	Evaluation
				Injected quantity limitation due to air mass drawn in (smoke prevention)	40.0...44.0 mg/H	=> Page 44
			Injected quantity limitation via revs. (torque limitation)		41.0...43.0 mg/H	=> Page 43
		Injected quantity (driver's requirement)			43.0...44.0 mg/H	=> Page 43
	Engine speed				2800...3200 rpm	---

Evaluation: Display group 8, display zone 2 - Injected quantity (driver's requirement)

V.A.G 1551 display	Possible fault cause	Fault elimination
Below specification	- No full throttle	- Repeat check at full throttle.
	- Accelerator pedal position sender -G79 defective - Wiring open circuit to -G79	- Check -G79 => Repair group 20; Removing and installing parts of fuel system; Checking accelerator pedal position sender Checking accelerator pedal position sender

Evaluation: Display group 8, display zone 3 - Injected quantity limitation via revs. (torque limitation)

V.A.G 1551 display	Possible fault cause	Fault elimination
Below specification	- Engine speed too high or too low	- Read off specified value at 3000 rpm.

Volkswagen AG does not guarantee or assume any liability with respect to the correctness of information in this document. Copyright by Volkswagen AG. Proprietary copyright. Copying for private or commercial purposes, in part or in whole, is not permitted unless authorised by Volkswagen AG.
satelettronica

Evaluation: Display group 8, display zone 4 - Injection quantity limitation due to air mass drawn in (smoke prevention)

Engine codes AGP, AQM, AYQ

V.A.G 1551 display	Possible fault cause	Fault elimination
Below specification	- Air mass drawn in insufficient - Intake manifold flap change-over valve (N239) defective (engine codes AGP, AQM) - Intake manifold flap motor (V157) defective (engine code AYQ)	- Check -N239 =>Page 24 , Final control diagnosis
	- Exhaust gas recirculation quantity too high - EGR valve -N18 defective	- Check -N18 =>Page 24 , Final control diagnosis

Engine codes AGR, ALH, ASV

V.A.G 1551 display	Possible fault cause	Fault elimination
Below specification	- Air mass drawn in insufficient	- Check air mass meter => Page 109
	- Exhaust gas recirculation quantity too high	- Check exhaust gas recirculation => Repair group 26; Exhaust gas recirculation system; Checking exhaust gas recirculation Checking exhaust gas recirculation

Display group 010 at full throttle (test drive in 3rd gear, coolant temperature not below 80 °C)

Notes:

- When testing, accelerate the vehicle at full throttle.
- The measured values must be printed out or read (2nd person required) when the revolutions reach 3,000 rpm.

Display group 010 -Air quantities-						
▪ Whilst driving						
Read measured value block 10 ⇒				◂ Indicated on display		
xxx mg/H	xxxx mbar	xxxx mbar	xxx.x %			
1	2	3	4	◂ Display zones	Specification	Evaluation
				Accelerator pedal position	100 %	=> Page 45
				Intake manifold pressure (charge pressure): Engine codes AGR, ALH Engine code ASV	1650...2000 mbar 1650...2100 mbar	=> Page 45
		Atmospheric pressure (ambient pressure)			No specification	---
	Air mass drawn in: Engine codes AGR, ALH, ASV				750...890 mg/H	=> Page 44

Evaluation: Display group 10, display zone 1 - Air mass drawn in

V.A.G 1551 display	Possible fault cause	Fault elimination
Below specification	- Engine speed too high or too low	- Read off specified value at 3000 rpm.

satelettronica

V.A.G 1551 display	Possible fault cause	Fault elimination
	- Charge pressure too low	- Check charge pressure control: => Repair group 21; Checking charge pressure system; Checking charge pressure control Checking charge pressure control
	- Air mass meter (G70) defective	- Check -G70 => Page 109 If a fault is present, the measured value block indicates a constant air mass value of about 550 mg/H over total engine speed and load range

Evaluation: Display group 10, display zone 3 - Intake manifold pressure (charge pressure)

V.A.G 1551 display	Possible fault cause	Fault elimination
Below specification	- Charge pressure control defective - Turbocharger defective	- Check charge pressure control: => Repair group 21; Checking charge pressure system; Checking charge pressure control Checking charge pressure control
Above specification	- Turbocharger defective	

Evaluation: Display group 10, display zone 4 - Accelerator pedal position

V.A.G 1551 display	Possible fault cause	Fault elimination
Below specification	- No full throttle	- Repeat check at full throttle.
	- Accelerator pedal position sender -G79 defective - Wiring open circuit to -G79	- Check -G79 => Repair group 20; Removing and installing parts of fuel system; Checking accelerator pedal position sender Checking accelerator pedal position sender

Display group 011 at full throttle (test drive in 3rd gear, coolant temperature not below 80 °C)

Notes:

- When testing, accelerate the vehicle at full throttle.
- The measured values must be printed out or read (2nd person required) when the revolutions reach 3,000 rpm.

Display group 011 -Intake manifold pressure control- for engine codes AGP, AQM, AYQ						
▪ Whilst driving						
Read measured value block 11			⇒	◂ Indicated on display		
xxxx rpm			xxx %			
1	2	3	4	◂ Display zones	Specification	Evaluation
				Duty cycle for intake manifold flap change-over valve	4...6 %	=> Page 45
	Engine speed				2800...3200 rpm	---

Evaluation: Display group 11, display zone 4 - Duty cycle for intake manifold flap change-over valve

V.A.G 1551 display	Possible fault cause	Fault elimination

satelettronica

Specification outside tolerance	- Intake manifold flap change-over valve (N239) defective engine codes AGP, AQM) - Intake manifold flap motor (V157) defective (engine code AYQ)	- Check -N239 =>Page 24 , Final control diagnosis

Notes:

- When testing, accelerate the vehicle at full throttle.
- The measured values must be printed out or read (2nd person required) when the revolutions reach 3,000 rpm.

Display group 011 -Charge pressure control- for engine codes AGR, ALH, ASV						
▪ Whilst driving						
Read measured value block 11 ⇒				◂ Indicated on display		
xxxx rpm	xxxx mbar	xxxx mbar	xxx %			
1	2	3	4	◂ Display zones	Specification	Evaluation
				Duty cycle from charge pressure control valve	20...70 %	---
				Charge pressure (actual) Engine codes AGR, ALH Engine codes ASV	1650...2000 mbar 1650...2100 mbar	=> Page 46
		Charge pressure (specified)			1650...1950	---
	Engine speed				2800...3200 rpm	---

Evaluation: Display group 11, display zone 3 - Charge pressure (actual)

V.A.G 1551 display	Possible fault cause	Fault elimination
Below specification	- Charge pressure control defective - Turbocharger defective	- Check charge pressure control: => Repair group 21; Checking charge pressure system; Checking charge pressure control Checking charge pressure control
Above specification	- Turbocharger defective	

Protected by copyright. Copyright for private or commercial purposes, in part or in whole, is not permitted unless authorised by Volkswagen AG. Volkswagen does not guarantee or accept any liability with respect to the correctness of information in this document. Copyright by Volkswagen AG.

satelettronica

23 - Mixture preparation, Injection

1 - Servicing Diesel direct injection system

1.1 - Servicing Diesel direct injection system

The diesel direct injection system control unit is equipped with a fault memory. Before starting repairs or adjustments, or when fault finding, you must interrogate the fault memory =>Page 24 .

Notes:

- During some checks, it can happen that the control unit will recognise and store a fault. Therefore after completing all checks and repairs, you must interrogate the fault memory and erase it, if necessary. => Page 6 , Interrogating fault memory
- For trouble-free operation of the electrical components, a voltage of at least 11.5 V is necessary.

Safety precautions =>Page 47

Rules for cleanliness => Page 48

1.2 - Safety precautions

To prevent injuries to persons and/or damage to the injection and glow plug system, the following must be noted:

- The ignition must be switched off before connecting or disconnecting injection or glow plug system wiring or tester cables.

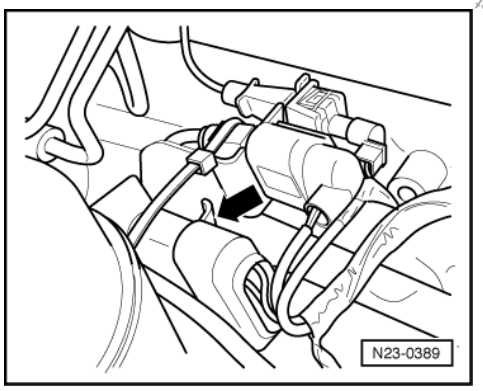

- If engine is to be cranked at starter speed without starting, e.g. during a compression check, pull 10-pin connector off injection pump.
- Before disconnecting battery, obtain radio code for radios fitted with anti-theft coding.
- Disconnecting and connecting the battery must only be undertaken when the ignition switched off otherwise the Diesel direct injection system control unit may be damaged.

Observe following if test and measuring instruments are required during a test drive:

- Test and measuring instruments must be secured to rear seat and operated by a 2nd person from this location.

  If test and measuring instruments are operated from front passenger's seat and the vehicle is involved in an accident, there is a possibility that the person sitting in this seat may receive serious injuries when the airbag is triggered.

Protected by copyright. Copyright by Volkswagen AG.
Copyright by Volkswagen AG. Volkswagen AG does not guarantee or accept any liability with respect to the correctness of information in this document. Copying for private or commercial purposes, in part or in whole, is not permitted unless authorised by Volkswagen AG.
satelettronica

1.3 - Rules for cleanliness

When working on the fuel supply/injection system, pay careful attention to the following "6 rules":

- Thoroughly clean all unions and the adjacent areas before disconnecting.
- Place parts that have been removed on a clean surface and cover. Do not use fluffy cloths!
- Carefully cover opened components or seal, if the repair cannot be carried out immediately.
- Only install clean components:
  Only unpack replacement parts immediately prior to installation.
  Do not use parts that have been stored loose (e.g. in tool boxes etc.).
- When the system is open:
  Do not work with compressed air if this can be avoided.
  Do not move vehicle unless absolutely necessary.

- Also ensure that no diesel fuel runs onto the coolant hoses. Hoses coming in contact with fuel must be cleaned immediately. Damaged hoses must be replaced.

1.4 - Fitting locations overview

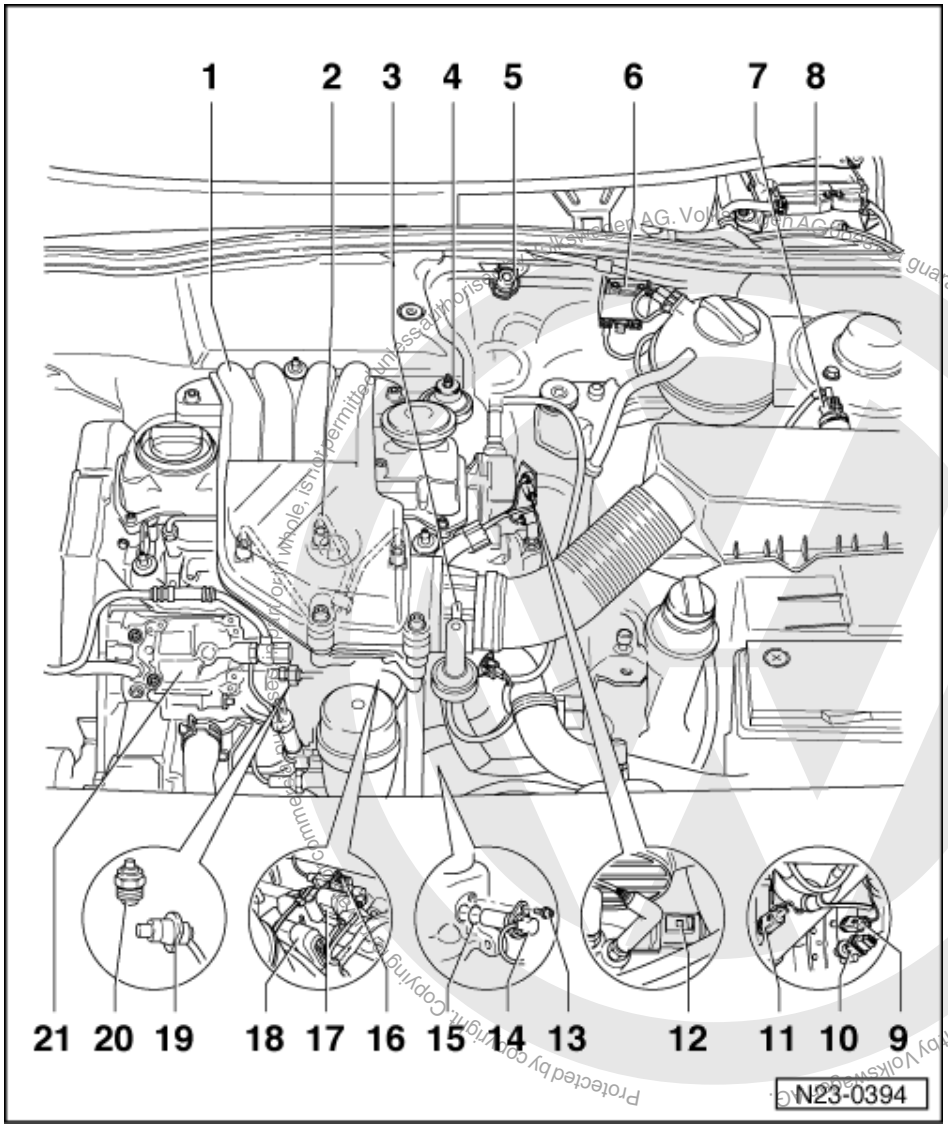

satelettronica

Engine codes AGP, AQM, AYQ

Engine codes AGR, ALH, ASV => Page 54 .

Component A is not shown in the figure.

A - Accelerator pedal position sender (G79)

- In footwell on accelerator
- Checking:

=> Repair group 20; Removing and installing parts of fuel supply system; Checking accelerator pedal position sender Removing and installing parts of fuel supply system Checking accelerator pedal position sender

1 Intake manifold - upper part

2 Injector

- For 3rd cylinder with needle lift sender (G80)

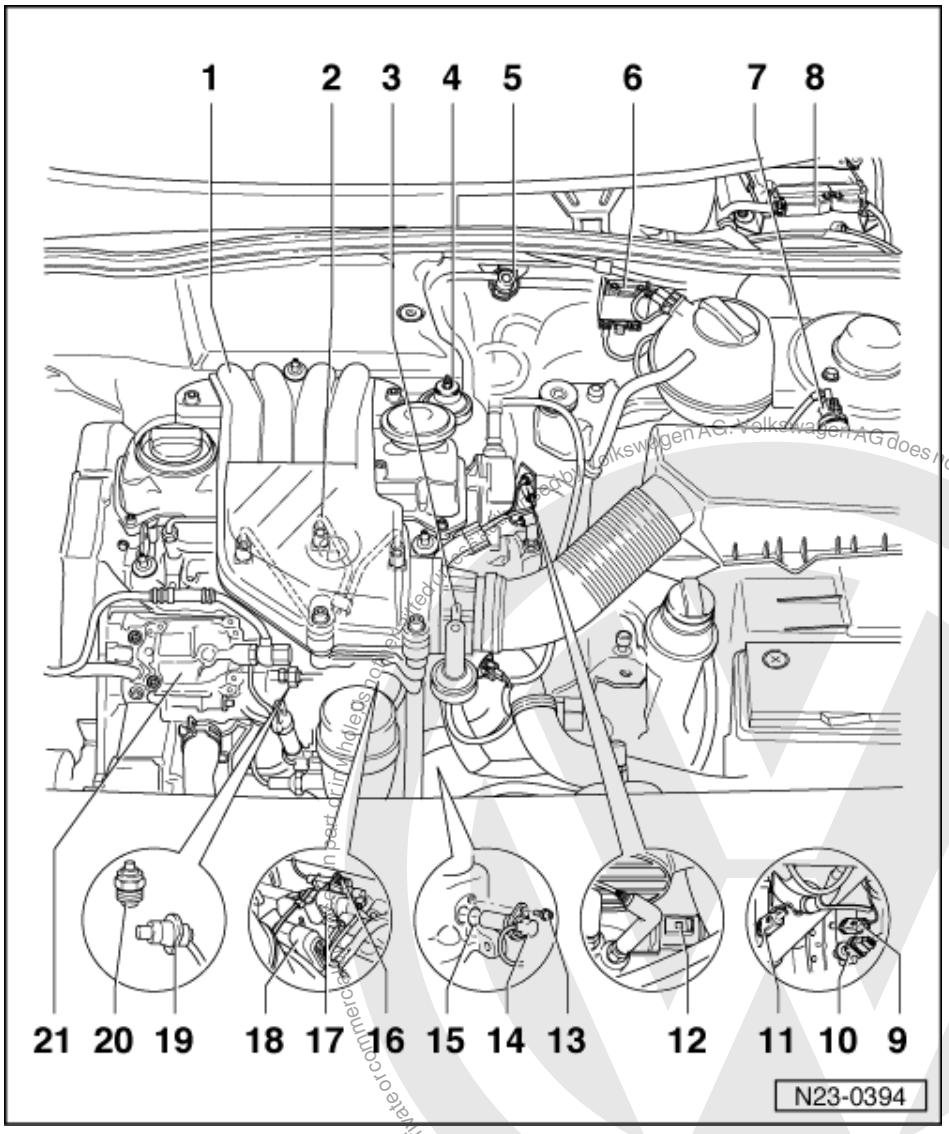

3 Air intake connecting piece

- Only renew complete
- With intake manifold flap change-over valve (N239) and intake manifold flap
- Checking intake manifold flap change-over valve (N239)
  => Page 24 , Final control diagnosis
- Checking intake manifold flap change-over => Page 112

satelettronica
Copyright by Volkswagen AG. Volkswagen AG does not guarantee or accept any liability with respect to the correctness of information in this document.

4 Exhaust gas recirculation valve (mechanical)
- Checking:

=> Repair group 26; Exhaust gas recirculation system Exhaust gas recirculation system

5 Exhaust gas recirculation valve (N18)
- Checking =>Page 24 , final control diagnosis

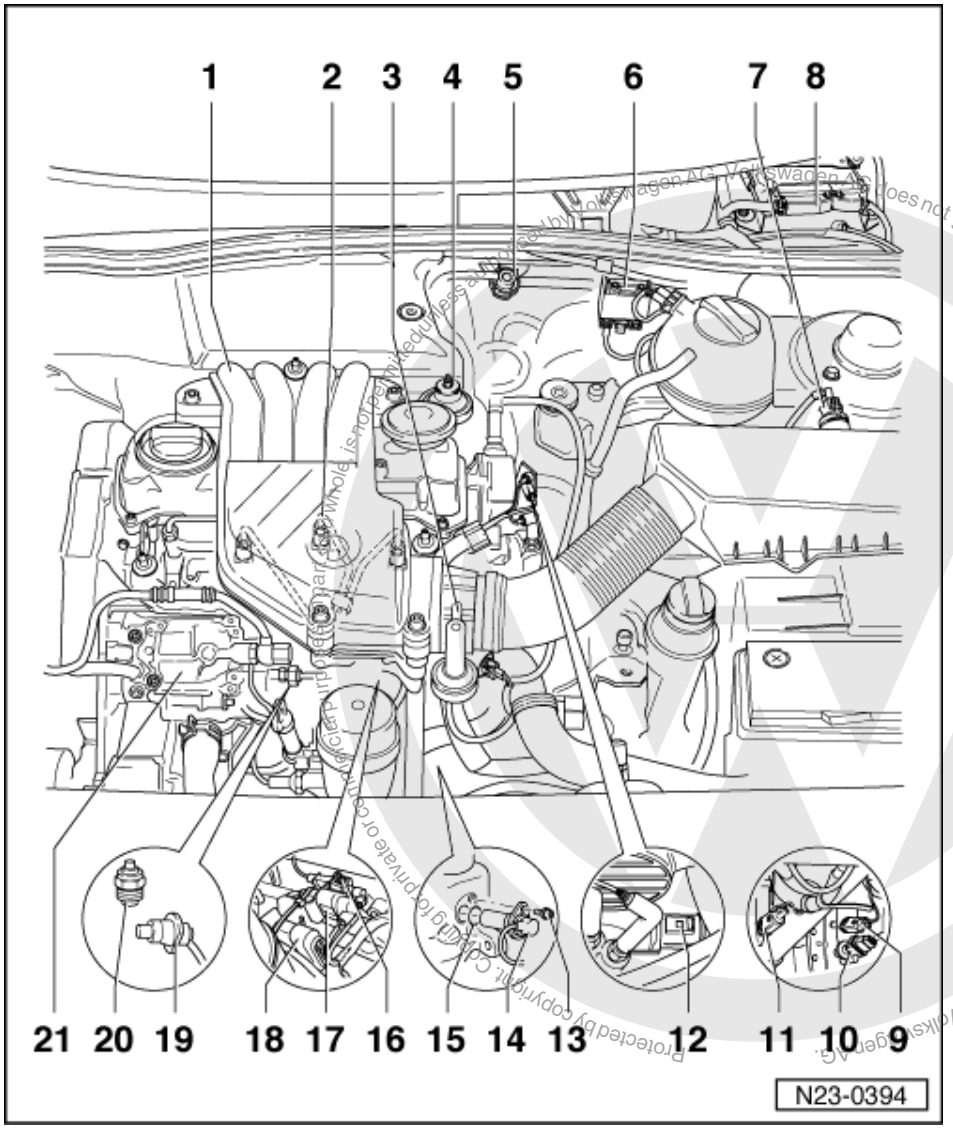

6 Low heat output relay (J359) and high heat output relay (J360)
- Checking =>Page 24 , final control diagnosis

7 Intake manifold temperature sender (G72)
- Checking => Page 95

8 Diesel direct injection system control unit (J248)
- Fitting location: In plenum chamber
- Checking voltage supply for diesel direct injection system => Page 87
- Renew => Page 130
- Coding => Page 131

9 Brake pedal switch(F47)
- In footwell on brake pedal
- Checking signals from brake light switch and brake pedal switch => Page 121

satelettronica

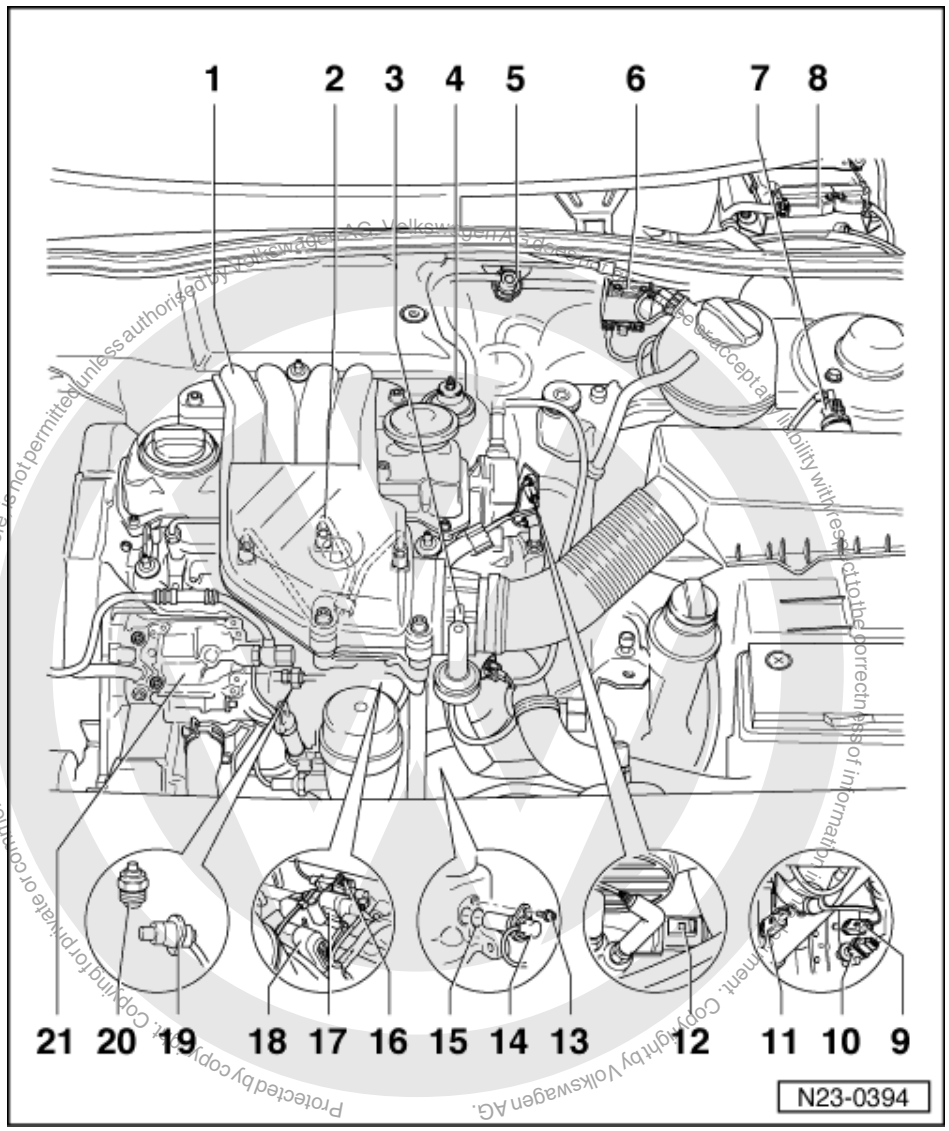

10 Brake light switch (F)

- In footwell on brake pedal
- Checking signals from brake light switch and brake pedal switch => Page 121

11 Clutch pedal switch (F36)

- In footwell on clutch pedal
- Checking signals from clutch pedal switch => Page 124

12 Coolant temperature sender (G62)

- Black
- For engine control unit
- With coolant temperature gauge sender (G2)
- If necessary release pressure in cooling system before removing
- Checking =>Page 92

13 10 Nm

satelettronica

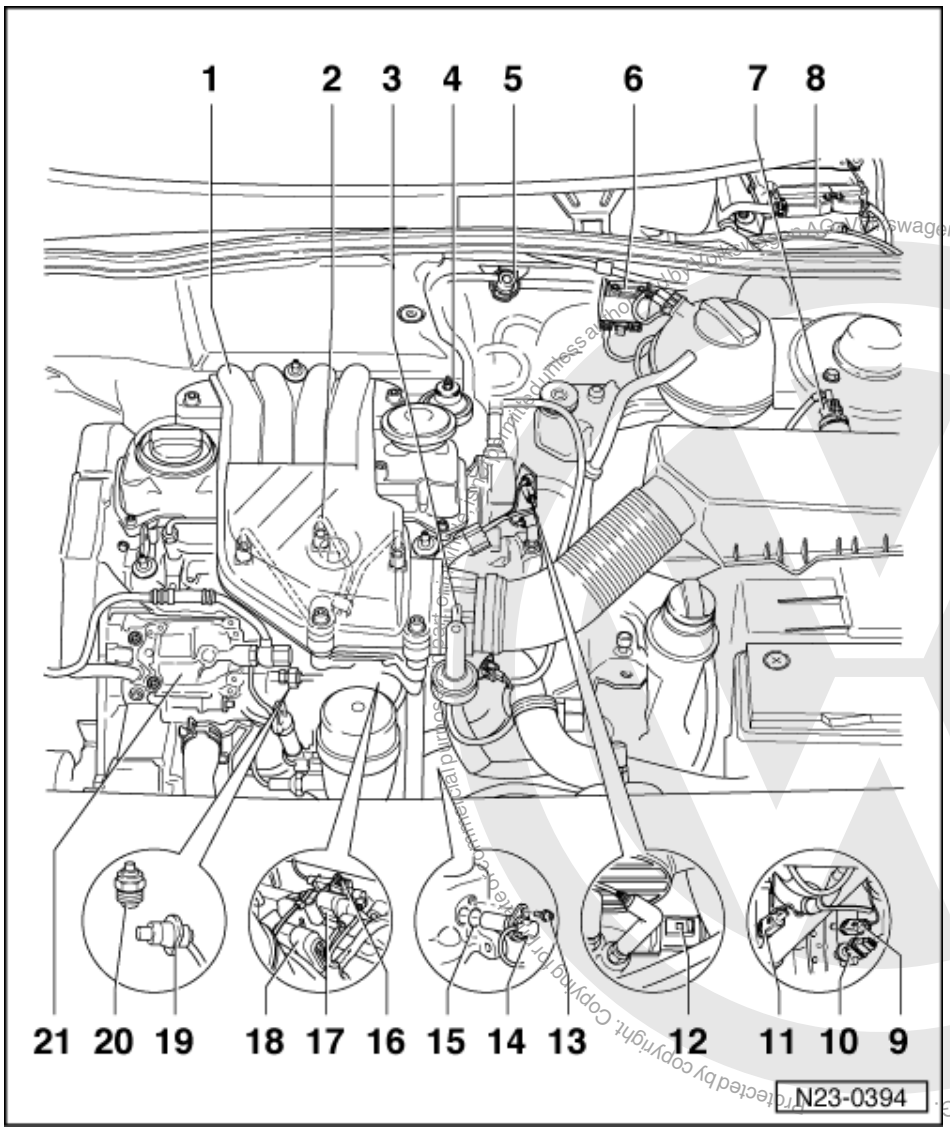

14 Engine speed sender (G28)
- Checking => Page 88

15 O-Ring
- Renew if damaged

16 2 pin connector
- Brown/black
- For needle lift sender (G80)

17 3 pin connector
- Black/grey
- For engine speed sender (G28)

18 10 pin connector
- Black
- For fuel temperature sender (G81)
- For quantity adjuster (N146)
- For modulating piston movement sender (G149)
- For fuel shut-off valve (N109)
- For commencement of injection valve (N108)

Volkswagen AG does not guarantee or accept any liability with respect to the correctness of information in this document. Copyright by Volkswagen AG.
Protected by copyright. Copying for private or commercial purposes, in part or in whole, is not permitted unless authorized by Volkswagen AG.
satelettronica

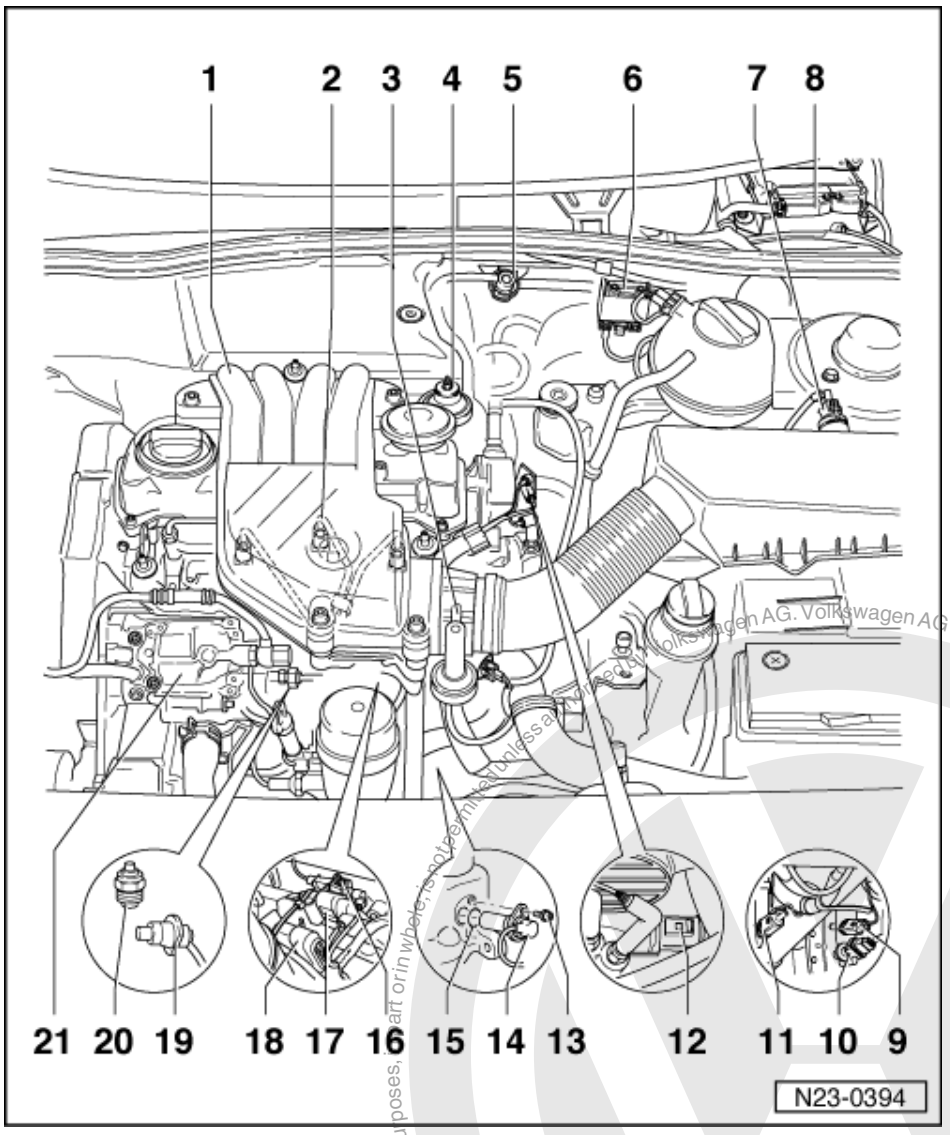

19 Commencement of injection valve (N108)

20 Fuel cut-off valve (N109)

21 Injection pump

- With quantity adjuster (metering)
- With quantity adjuster (N146)
- With modulating piston movement sender (G149)
- With fuel temperature sender (G81)

Protected by copyright. Copying for private or commercial purposes, in part or in whole, is not permitted unless authorised by Volkswagen AG. Volkswagen AG does not guarantee or accept any liability with respect to the correctness of information in this document. Copyright by Volkswagen AG.
satelettronica

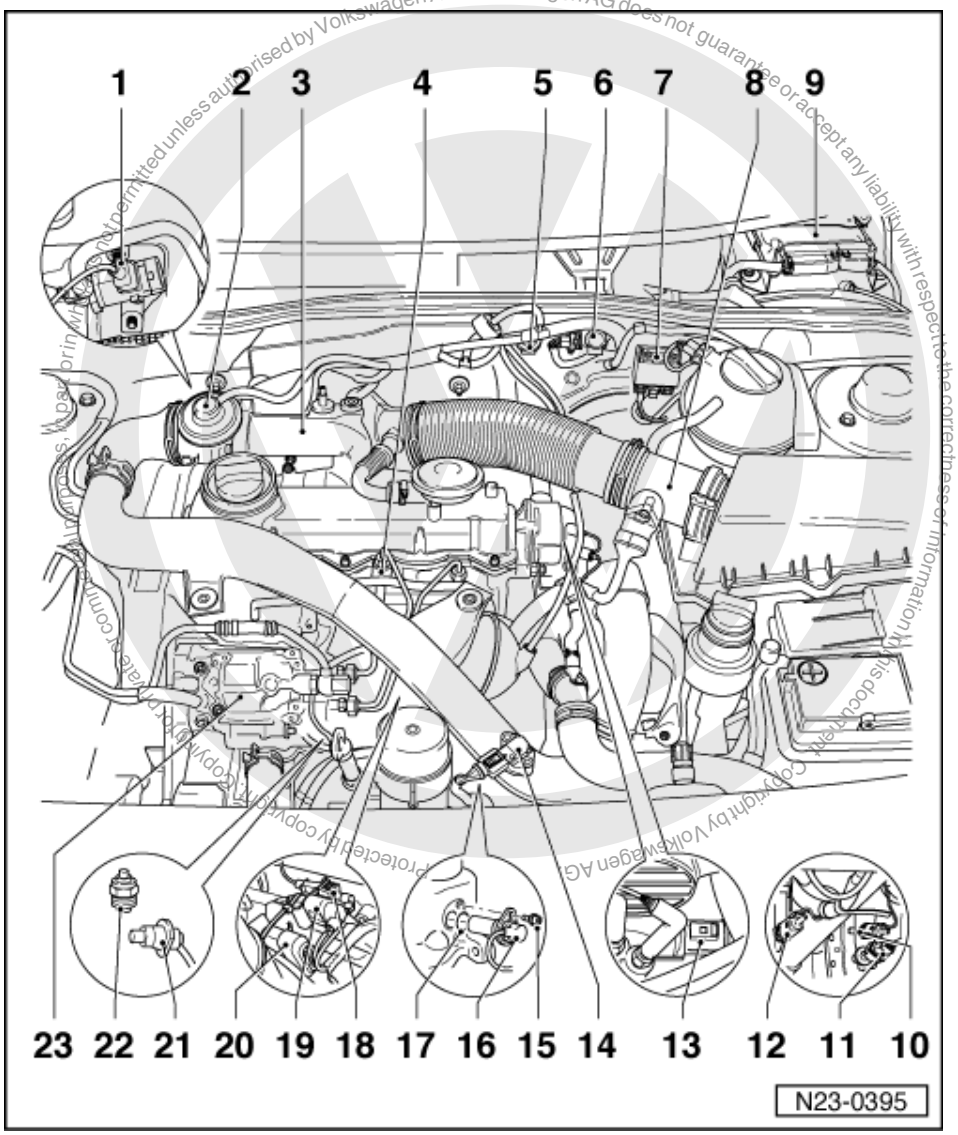

Engine codes AGR, ALH, ASV

Component A is not shown in the figure.

A - Accelerator pedal position sender (G79)

- In footwell on accelerator
- Checking:

=> Repair group 20; Removing and installing parts of fuel supply system; Checking accelerator pedal position sender Removing and installing parts of fuel supply system Checking accelerator pedal position sender

1 Intake manifold change-over valve (N239)

- Checking => Page 114

2 Exhaust gas recirculation valve (mechanical)

- Checking:

=> Repair group 26; Exhaust gas recirculation system Exhaust gas recirculation system

3 Intake manifold

satelettronica

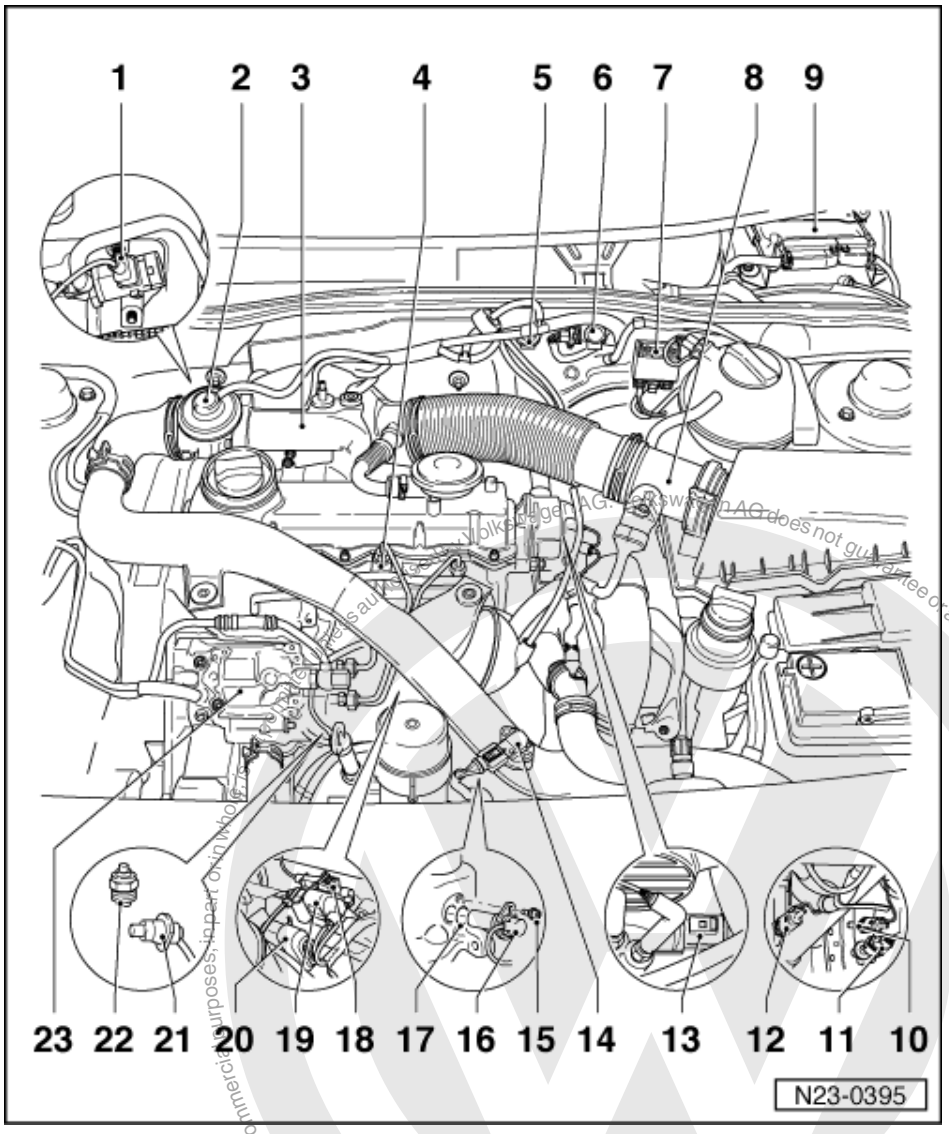

4 Injector
- For 3rd cylinder with needle lift sender (G80)

5 Exhaust gas recirculation valve (N18)
- Checking =>Page 24 , final control diagnosis

6 Charge pressure control solenoid valve (N75)
- Checking =>Page 24 , final control diagnosis

7 Low heat output relay (J359) and high heat output relay (J360)
- Checking =>Page 24 , final control diagnosis

8 Air mass meter (G70)
- Checking=> Page 109

satelettronica

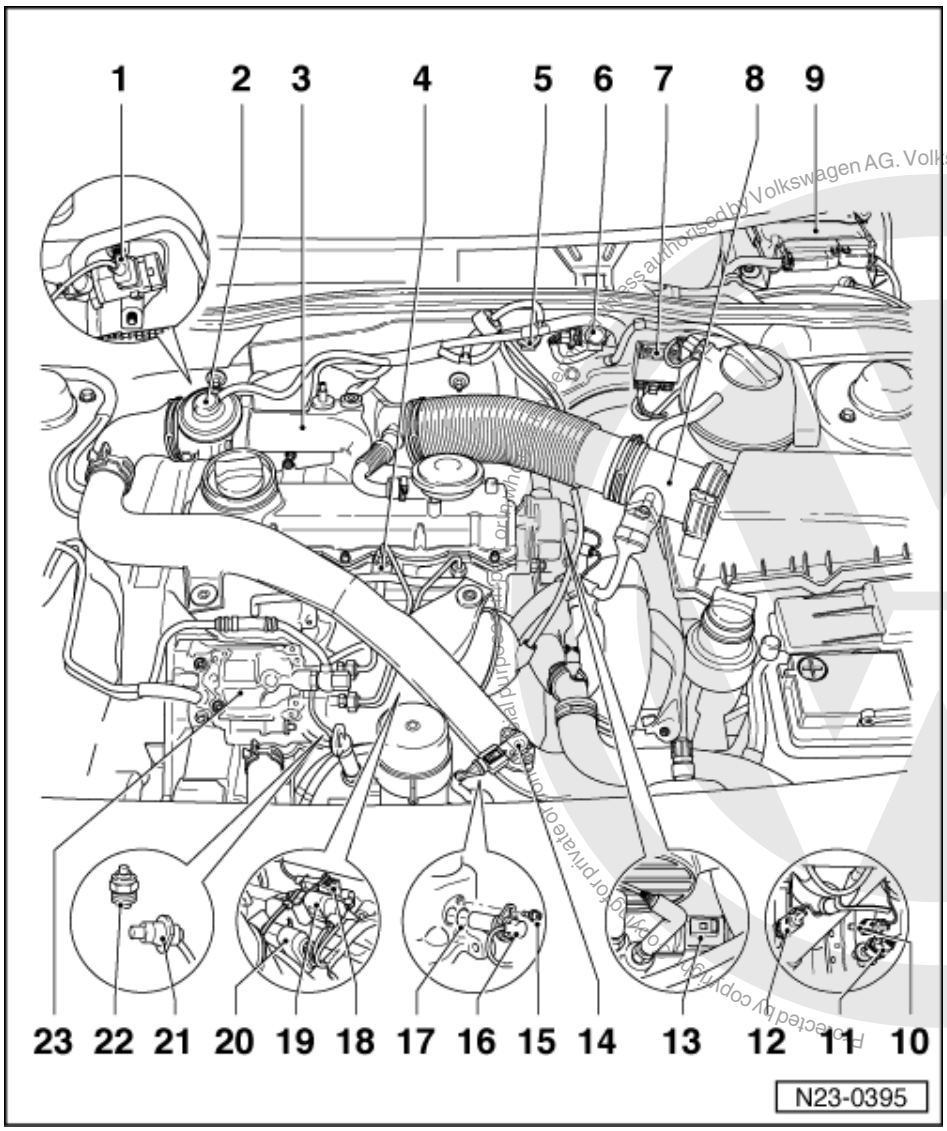

9 Diesel direct injection system control unit (J248)

- Fitting location: In plenum chamber
- Checking voltage supply for diesel direct injection system => Page 87
- Renew => Page 130
- Coding => Page 131
- With elevation sender (F96)
- Checking elevation sender
  => Page 90 , Checking intake manifold pressure sender and elevation sender

10 Brake pedal switch(F47)

- In footwell on brake pedal
- Checking signals from brake light switch and brake pedal switch => Page 121

11 Brake light switch (F)

- In footwell on brake pedal
- Checking signals from brake light switch and brake pedal switch => Page 121

Protected by copyright. Copy for private or commercial purposes, in part or in whole, is not permitted unless authorised by Volkswagen AG. Volkswagen AG does not guarantee or accept any liability with respect to the correctness of information in this document. Copyright by Volkswagen AG.
satelettronica

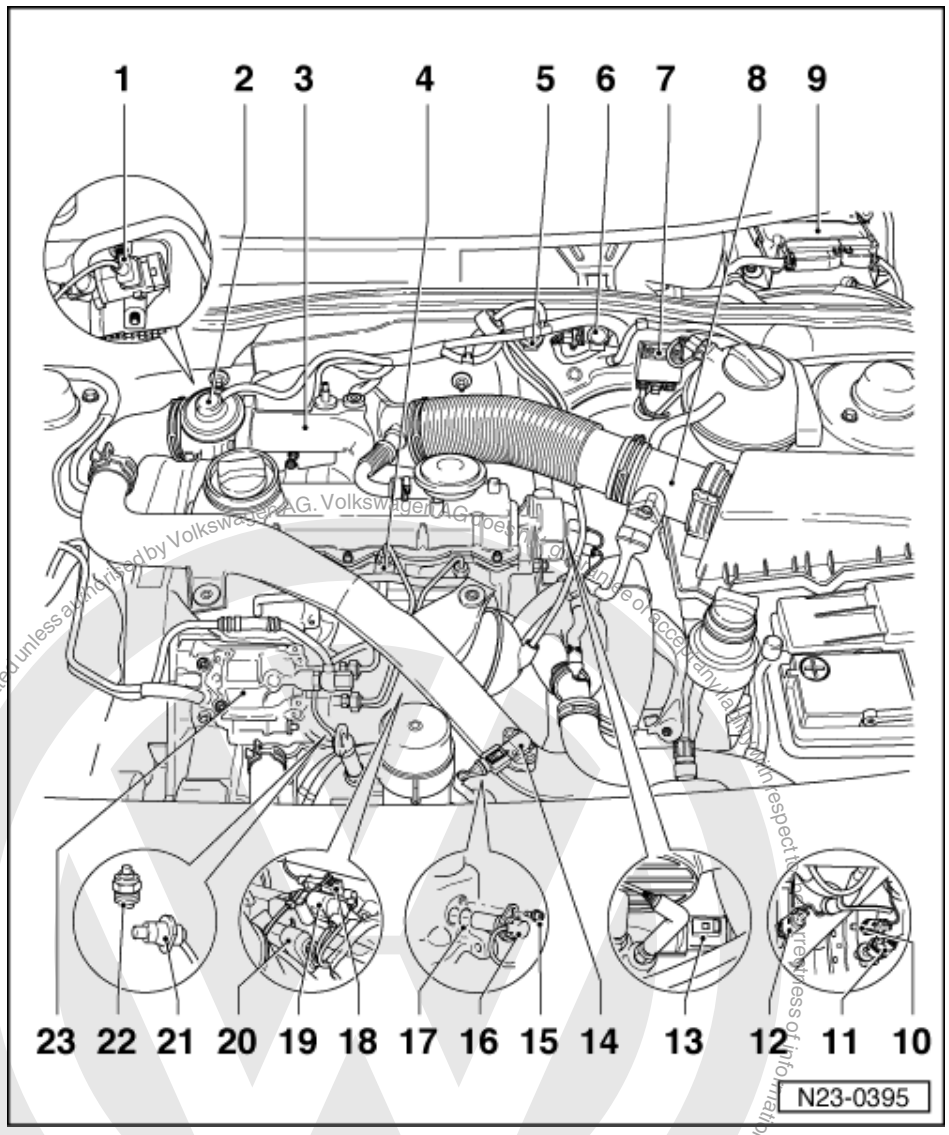

12 Clutch pedal switch (F36)

- In footwell on clutch pedal
- Checking signals from clutch pedal switch => Page 124

13 Coolant temperature sender (G62)

- Black
- For engine control unit
- With coolant temperature gauge sender (G2)
- If necessary release pressure in cooling system before removing
- Checking =>Page 92

14 Intake manifold pressure (G71) and intake manifold temperature sender (G72)

- Checking intake manifold pressure sender => Page 90 , Checking intake manifold pressure sender and elevation sender
- Checking intake manifold temperature sender => Page 95

satelettronica

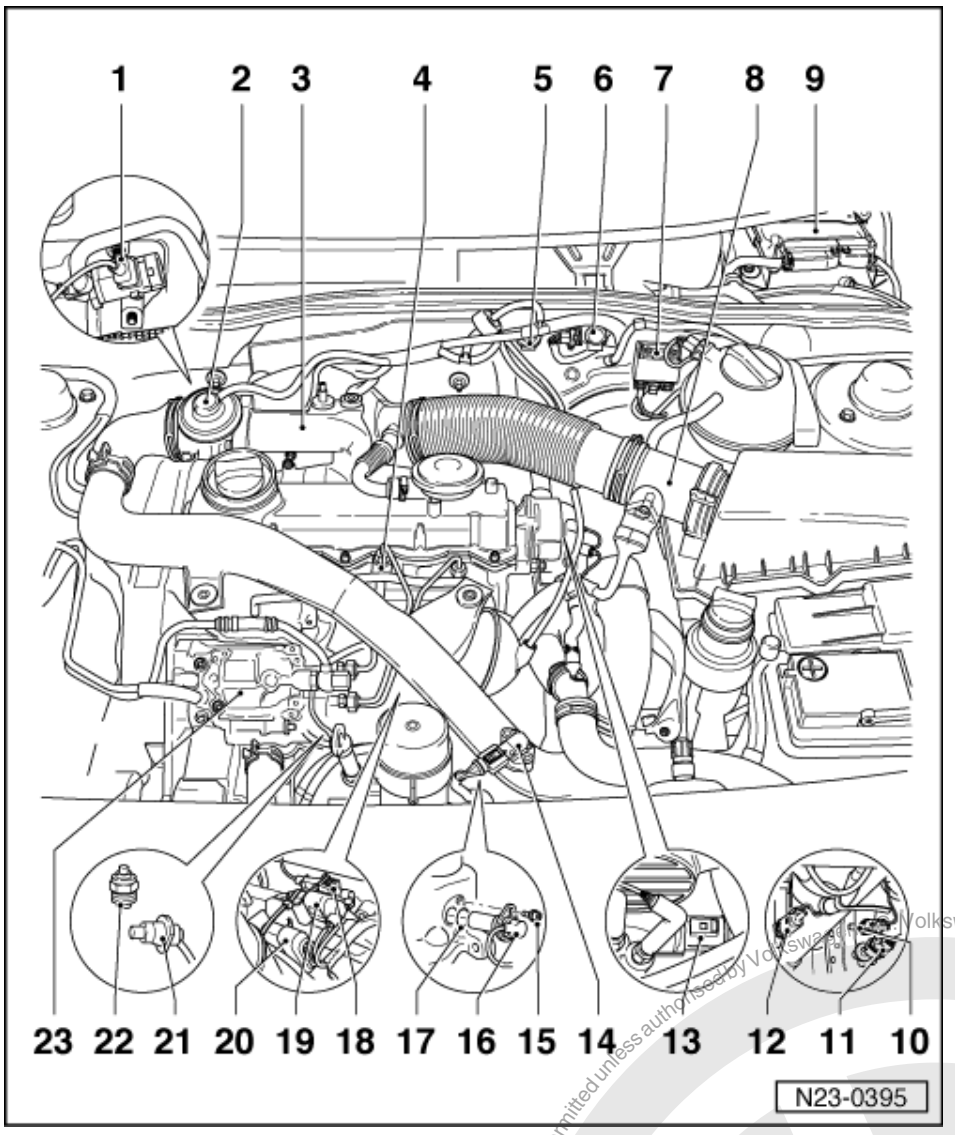

15 10 Nm

16 Engine speed sender (G28)
- Checking => Page 88

17 O-Ring
- Renew if damaged

18 2 pin connector
- Brown/black
- For needle lift sender (G80)

19 3 pin connector
- Black/grey
- For engine speed sender (G28)

20 10 pin connector
- Black
- For fuel temperature sender (G81)
- For quantity adjuster (N146)
- For modulating piston movement sender (G149)
- For fuel shut-off valve (N109)
- For commencement of injection valve (N108)

Protected by copyright. Copying for private or commercial purposes, in part or in whole, is not permitted unless authorised by Volkswagen AG. Volkswagen AG does not guarantee or accept any liability with respect to the correctness of information in this document. Copyright by Volkswagen AG.
satelettronica

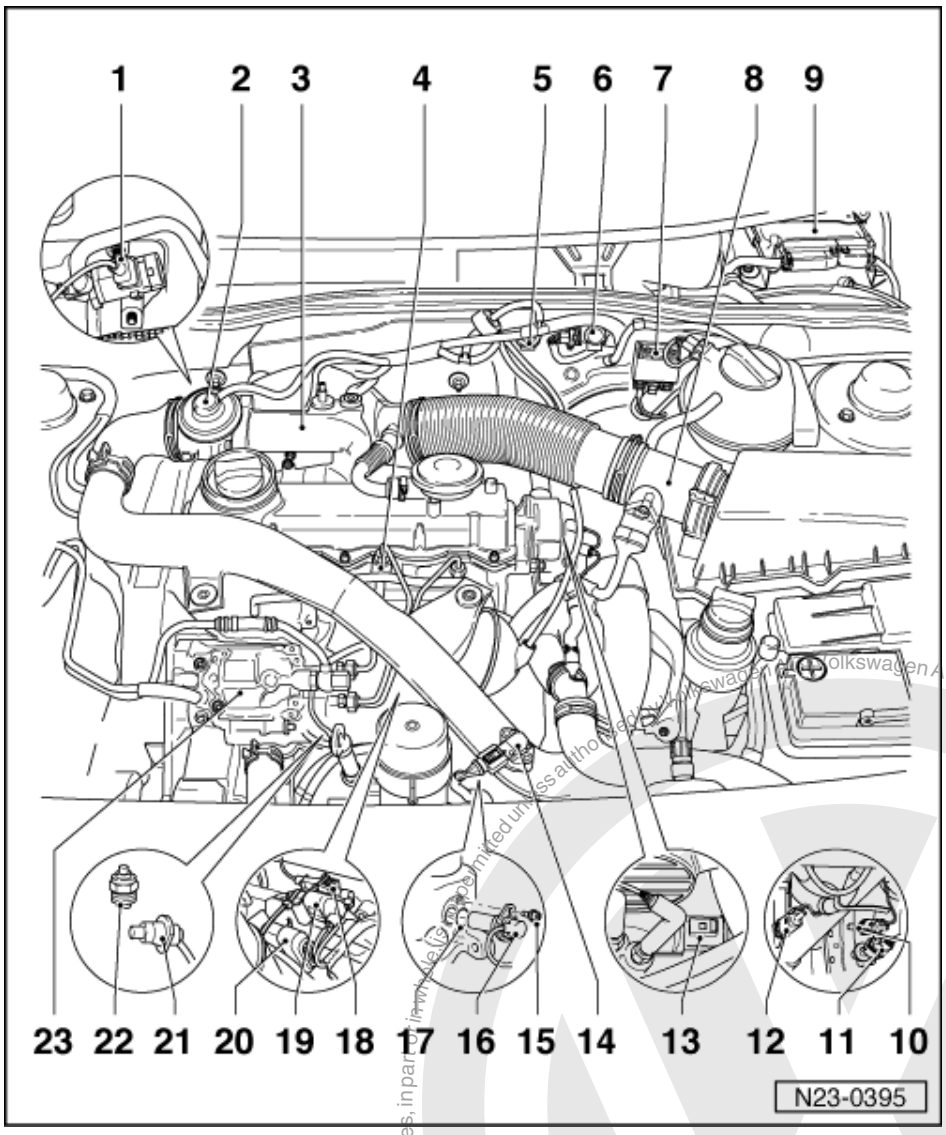

21 Commencement of injection valve (N108)
22 Fuel cut-off valve (N109)
23 Injection pump
- With quantity adjuster (metering)
- With quantity adjuster (N146)
- With modulating piston movement sender (G149)
- With fuel temperature sender (G81)

Protected by copyright. Copyright for private, non-commercial purposes, in particular in the case of commercial use, is prohibited unless authorised by Volkswagen AG. Volkswagen AG does not guarantee or accept any liability with respect to the correctness of information in this document. Copyright by Volkswagen AG.
satelettronica

1.5 - Servicing injection pump

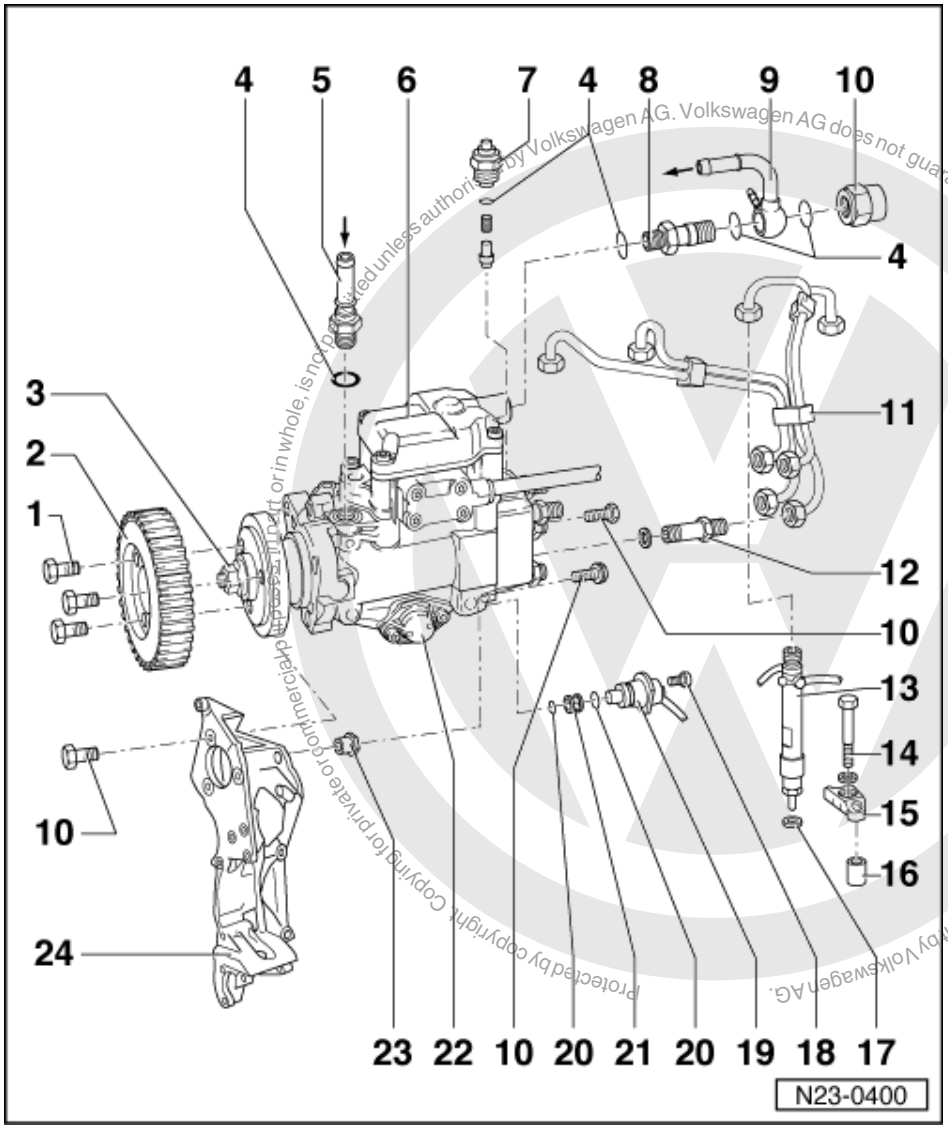

- Observe rules for cleanliness
  =>Page 48
- Removing and installing injection pump
  =>Page 76
- Dynamically checking and adjusting injection pump =>Page 81
- Always renew seals and O-rings

1 **Injection pump sprocket securing bolts**
  - Take note of different types and torque settings =>Fig. 1

satelettronica

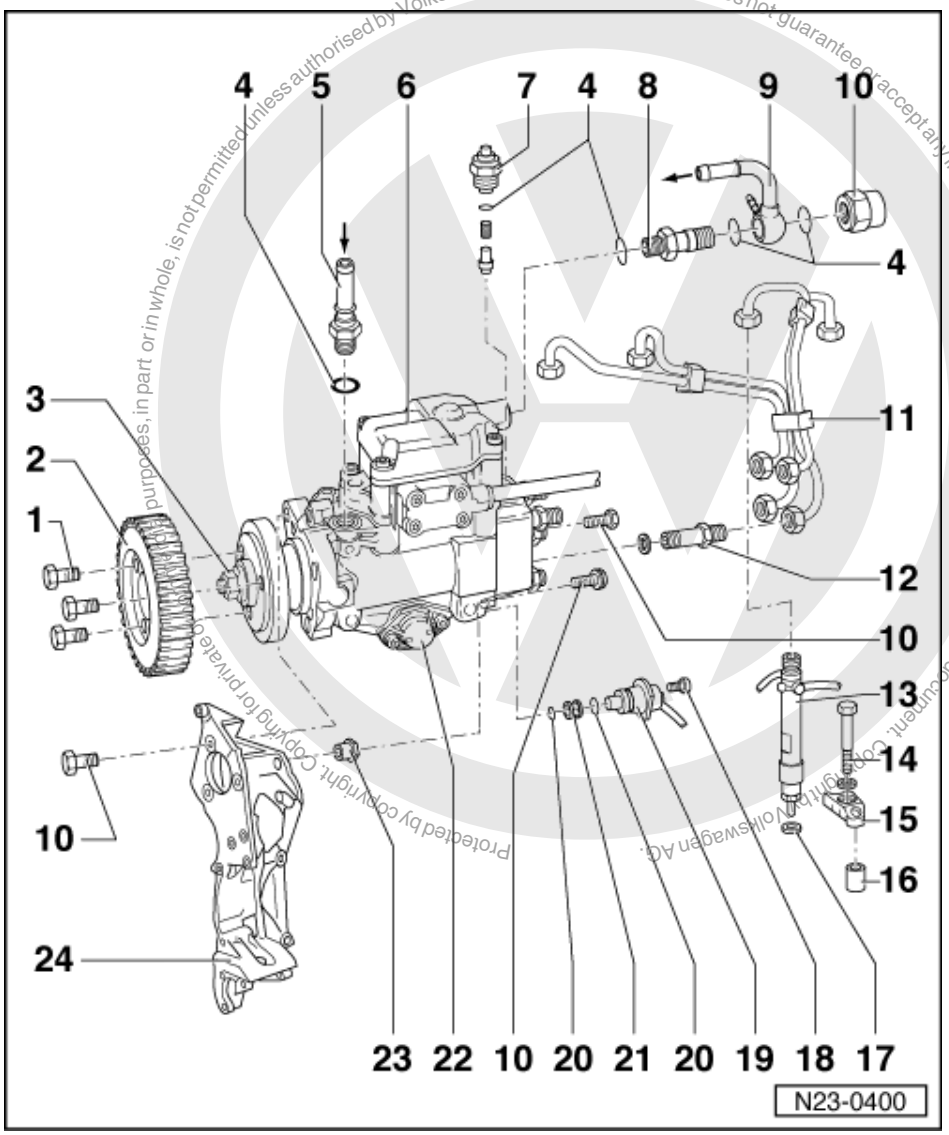

2 Injection pump sprocket
- Two part
- Take note of different types (Part No.) =>Fig. 1
- Removing and installing => Page 76 , Removing and installing injection pump

3 Nut
- For hub
- Do not loosen. Otherwise the injection pump basic setting may be altered and this cannot be reset with normal workshop equipment

4 Seal
- Renew

satelettronica

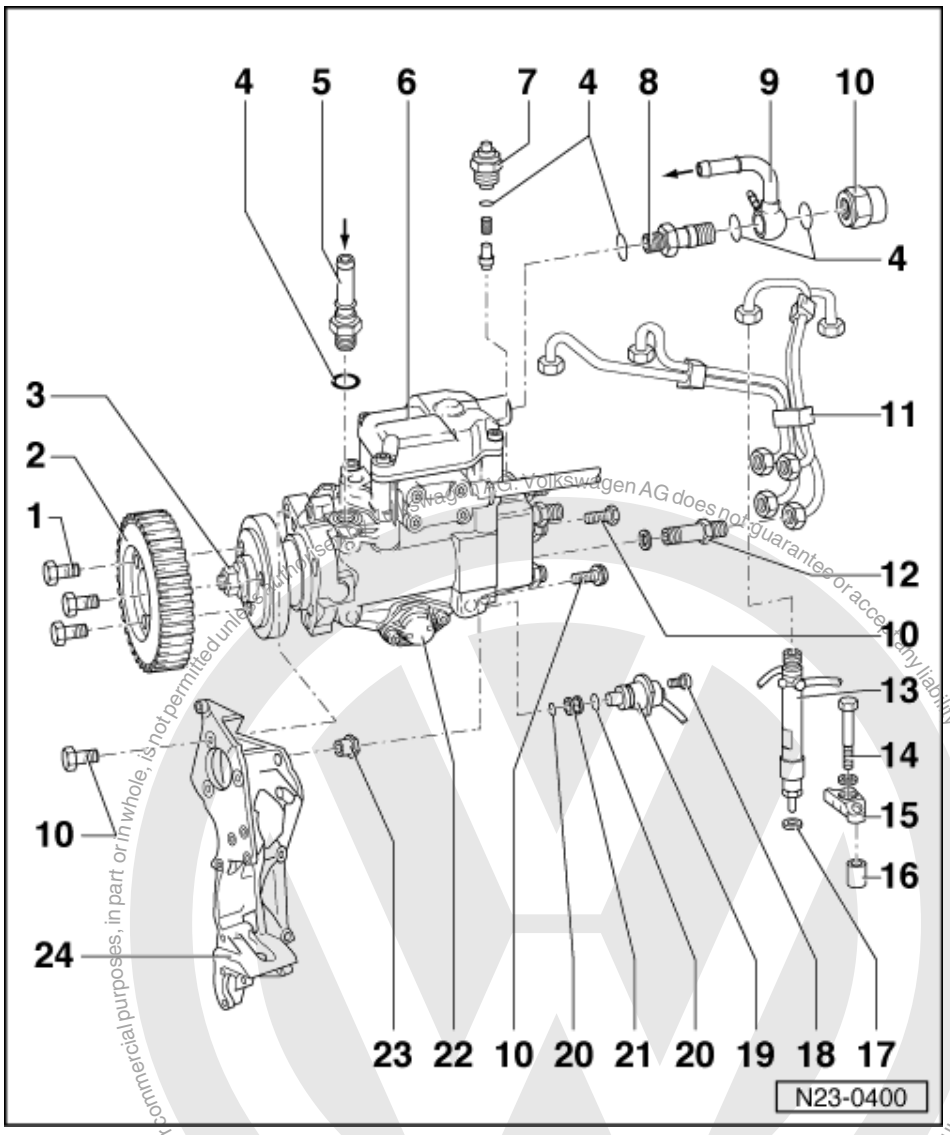

5 Pipe union, 25 Nm
- For supply pipe
- From fuel filter:

=> Repair Group 20; Removing and installing parts of fuel supply system; Servicing fuel filter Removing and installing parts of fuel supply system Servicing fuel filter

6 Injection pump
- With quantity adjuster (metering)
- With quantity adjuster (N146)
- With modulating piston movement sender (G149)
- With fuel temperature sender (G81)
- Removing and installing
  =>Page 76
- Dynamically checking and adjusting commencement of injection
  =>Page 81

7 Fuel shut-off valve (N109), 40 nm
- Checking =>Page 24 , final control diagnosis

Protected by copyright. Copyright by Volkswagen AG. Volkswagen AG does not guarantee or accept any liability with respect to the correctness of information in this document. Copying for private or commercial purposes, in part or in whole, is not permitted unless authorised by Volkswagen AG.
satelettronica

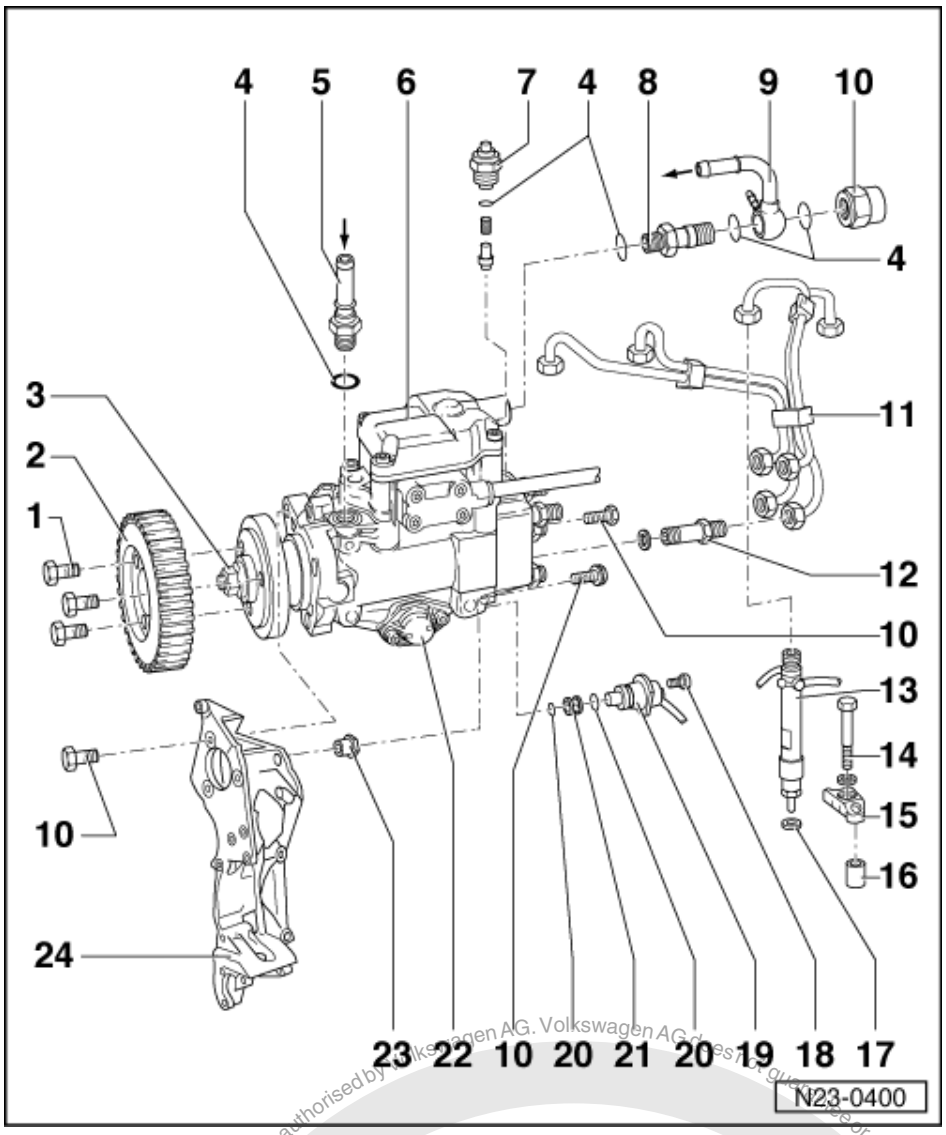

8 Pipe union
- For return pipe

9 Return pipe
- To fuel filter control valve:

=> Repair Group 20; Removing and installing parts of fuel supply system; Servicing fuel filter Removing and installing parts of fuel supply system Servicing fuel filter

10 25 Nm

11 Injector pipes
- Tighten to 25 Nm
- Remove with ring spanner 3035
- Always remove pipework complete
- Do not alter shape

12 Pipe union, 45 Nm
- With pressure valve

satelettronica

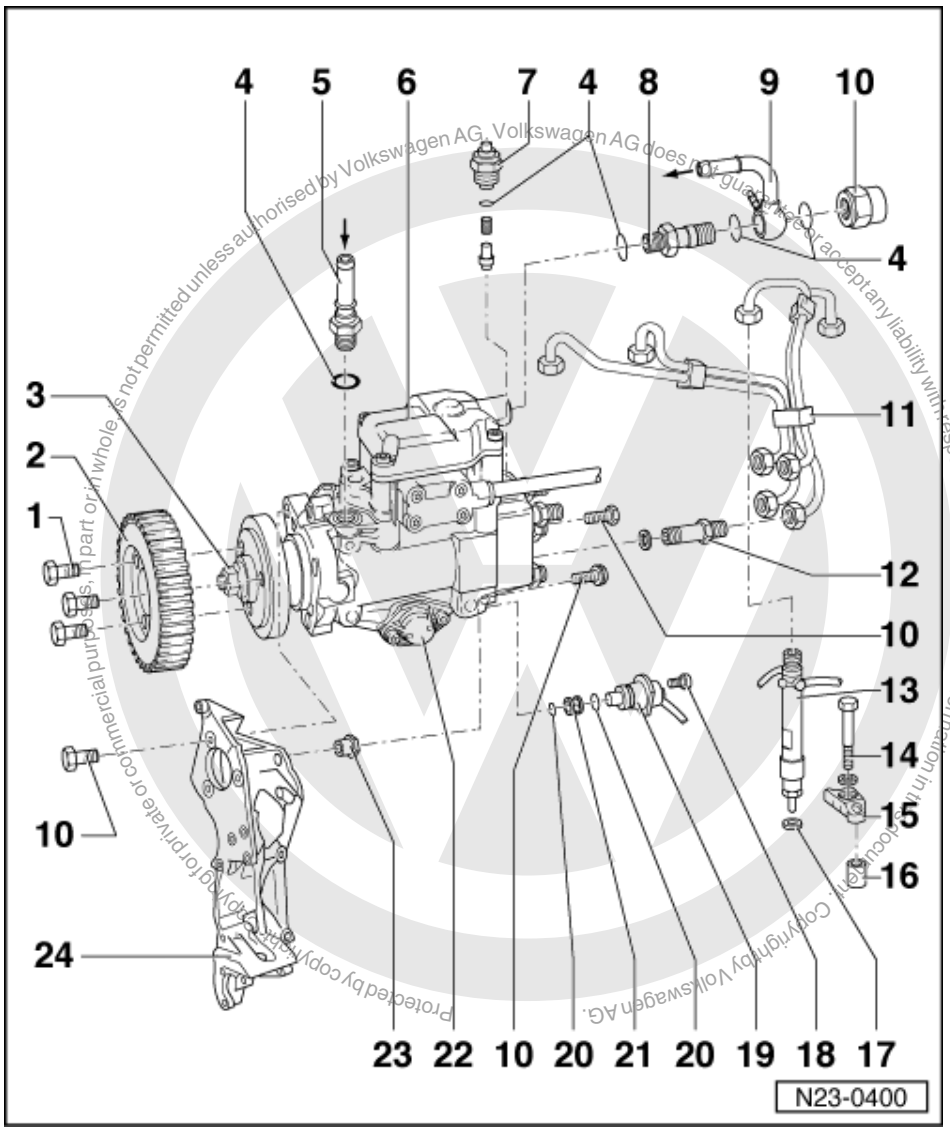

Protected by copyright. Copying for private or commercial purposes, in part or in whole is not permitted unless authorised by Volkswagen AG. Volkswagen AG does not guarantee or accept any liability with respect to the correctness of information in this document. Copyright by Volkswagen AG.

13 Injector

- Removing and installing
  => Page 84
- Checking => Page 86
- For 3rd cylinder with needle lift sender (G80)
- Checking needle lift sender
  => Page 105

14 20 Nm

15 Retainer

16 Mounting

17 Heat insulation seal

- Renew

18 10 Nm

19 Commencement of injection valve (N108)

- Checking =>Page 24 , final control diagnosis

satelettronica

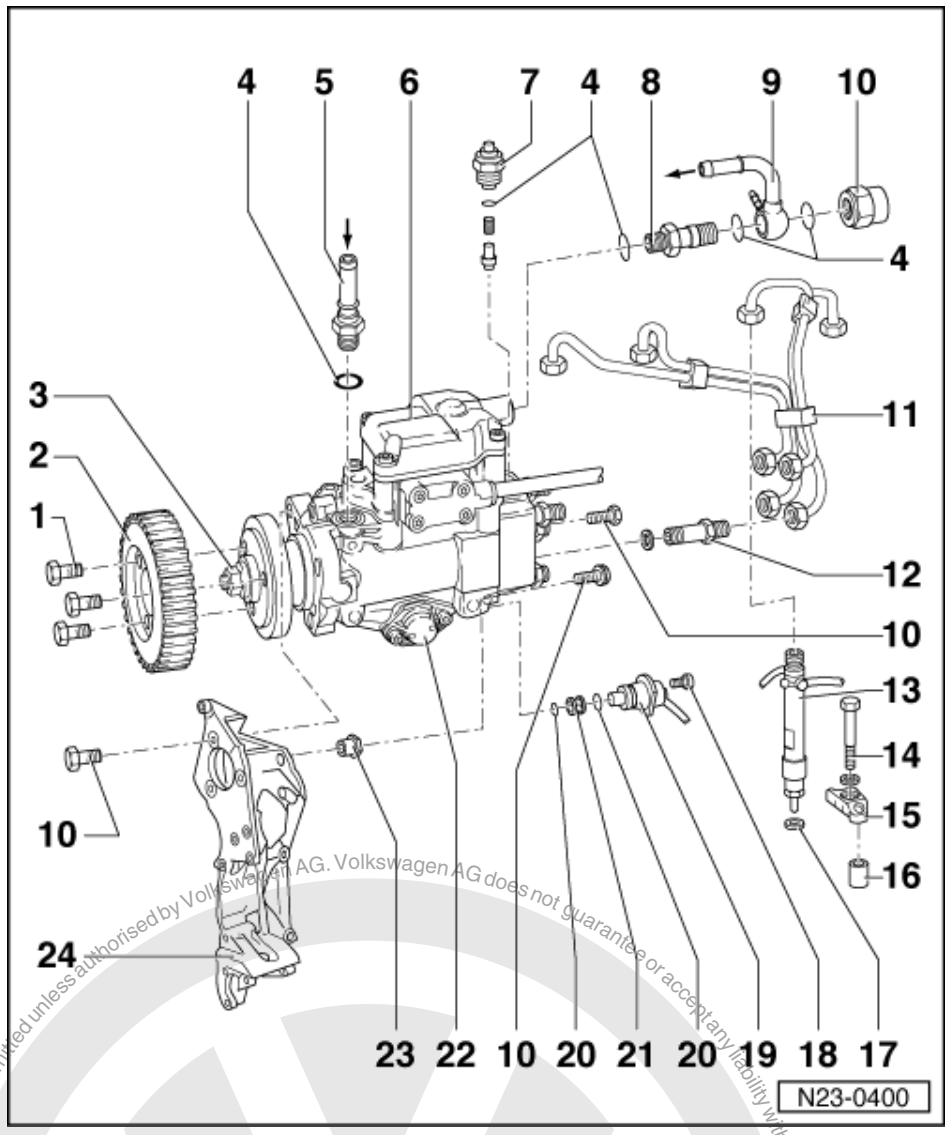

20 O-Ring
- Renew

21 Strainer
- Clean strainer if soiled

22 Timing control cover
- If leaking, replace O-ring =>Page 87

23 Sleeve
- With securing nut

24 Compact bracket
- Removing and installing:

=> Repair group 13; Dismantling and assembling engine Dismantling and assembling engine

Protected by copyright. Copying for private or commercial purposes, in part or in whole, is not permitted unless authorised by Volkswagen AG. Volkswagen AG does not guarantee or accept any liability with respect to the correctness of information in this document. Copyright by Volkswagen AG.
satelettronica

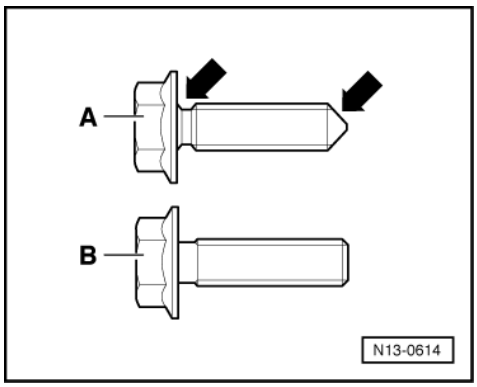

-> Fig.1 Types of injection pump sprocket securing bolts

Version -A-:

Securing bolts with chamfer on shaft and pointed end -arrows-

- Part number on injection pump sprocket:
  038 130 111 A
- Torque setting of securing bolts:
  20 Nm + 1/4 turn (90°)
- Renew securing bolts

Note:

The securing bolt -A- is a stretch bolt and must always be replaced.

Version -B-: Securing bolts without chamfer on shaft and without pointed end

- Part number on injection pump sprocket:
  038 130 111 B
- Torque setting of securing bolts:
  25 Nm
- Securing bolts need not be renewed

Protected by copyright. Copying for private or commercial purposes, in part or in whole, is not permitted unless authorised by Volkswagen AG. Volkswagen AG does not guarantee or accept any liability with respect to the correctness of information in this document. Copyright by Volkswagen AG.
satelettronica

1.6 - Dismantling and assembling parts of intake manifold

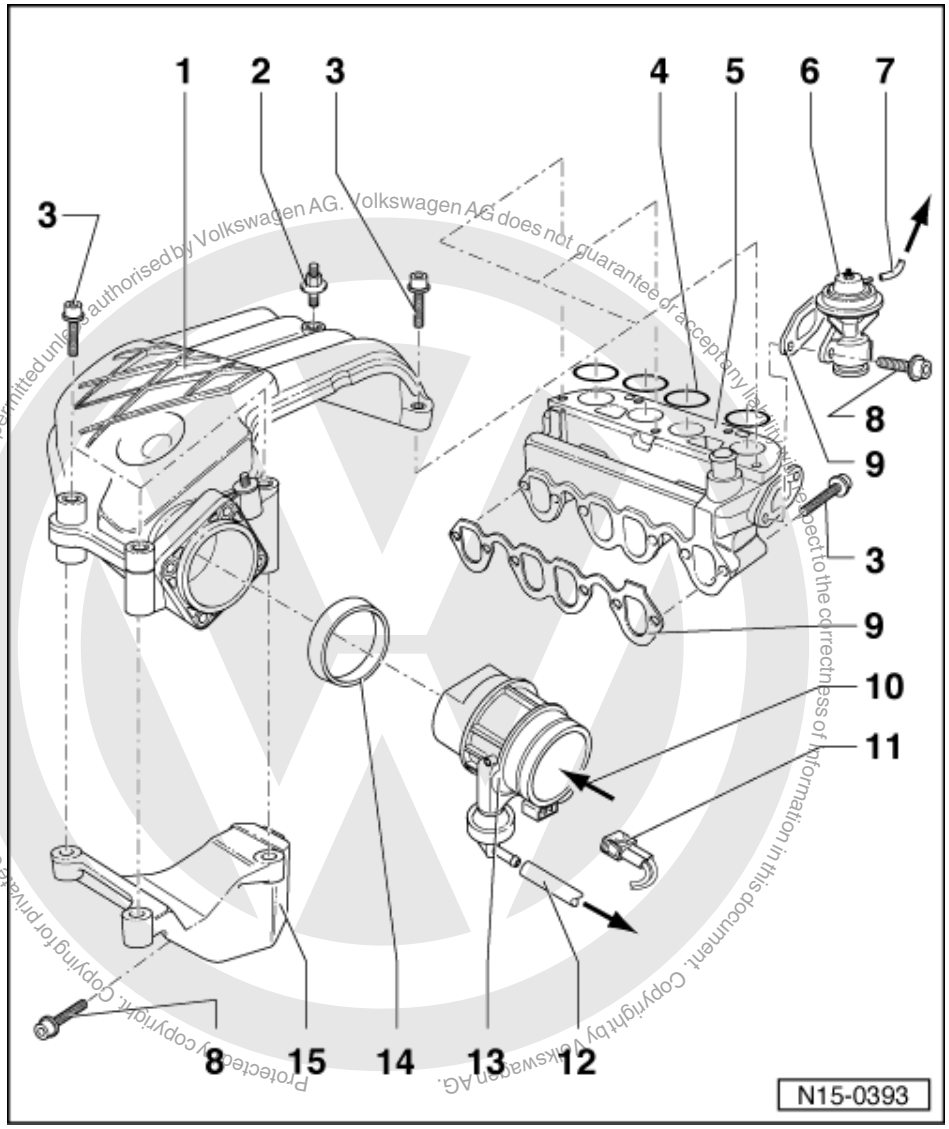

Protected by copyright. Copying for private or commercial purposes, in part or in whole, is not permitted unless authorised by Volkswagen AG. Volkswagen AG does not guarantee or accept any liability with respect to the correctness of information in this document. Copyright by Volkswagen AG.

satelettronica

Engine codes AGP, AQM

Engine codes AGR, ALH, ASV => Page 70 .

Engine code AYQ=>Page 73 .

1 **Intake manifold - upper part**
2 **10 Nm**
3 **20 Nm**
4 **O ring**
- Renew

5 **Intake manifold - lower part**
6 **Exhaust gas recirculation valve (mechanical)**
- Checking:

=> Repair group 26; Exhaust gas recirculation system Exhaust gas recirculation system

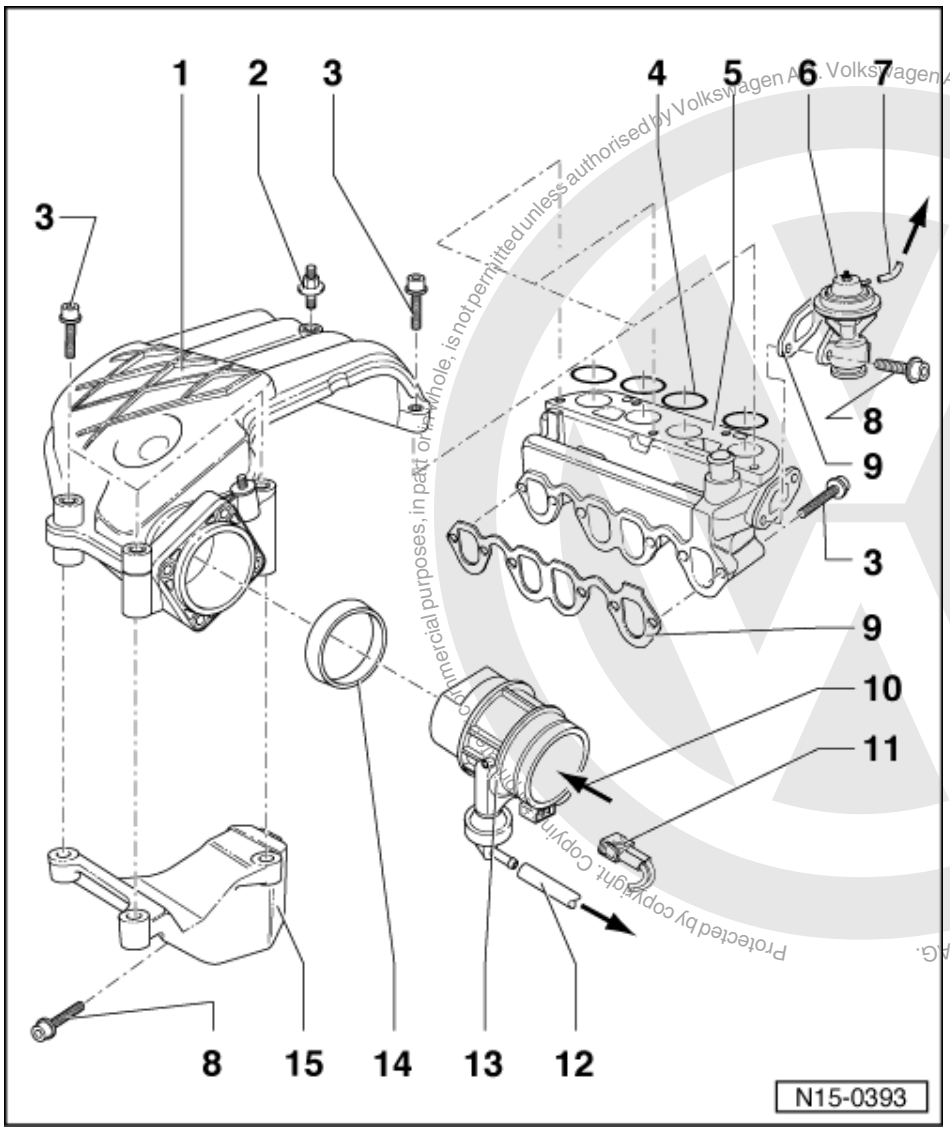

Protected by copyright. Copyright by Volkswagen AG. Volkswagen AG does not guarantee or accept any liability with respect to the correctness of information in this document. Copyright by Volkswagen AG. Commercial purposes, in part or in whole, is not permitted unless authorised by Volkswagen AG.

7 Vacuum pipe
- To EGR-valve (N18)

8 25 Nm

9 Gasket
- Renew

10 From air cleaner

11 Connector
- Black, 2-pin
- For intake manifold flap change-over valve (N239)

12 Vacuum pipe
- To non-return valve/vacuum pump branch piece

satelettronica

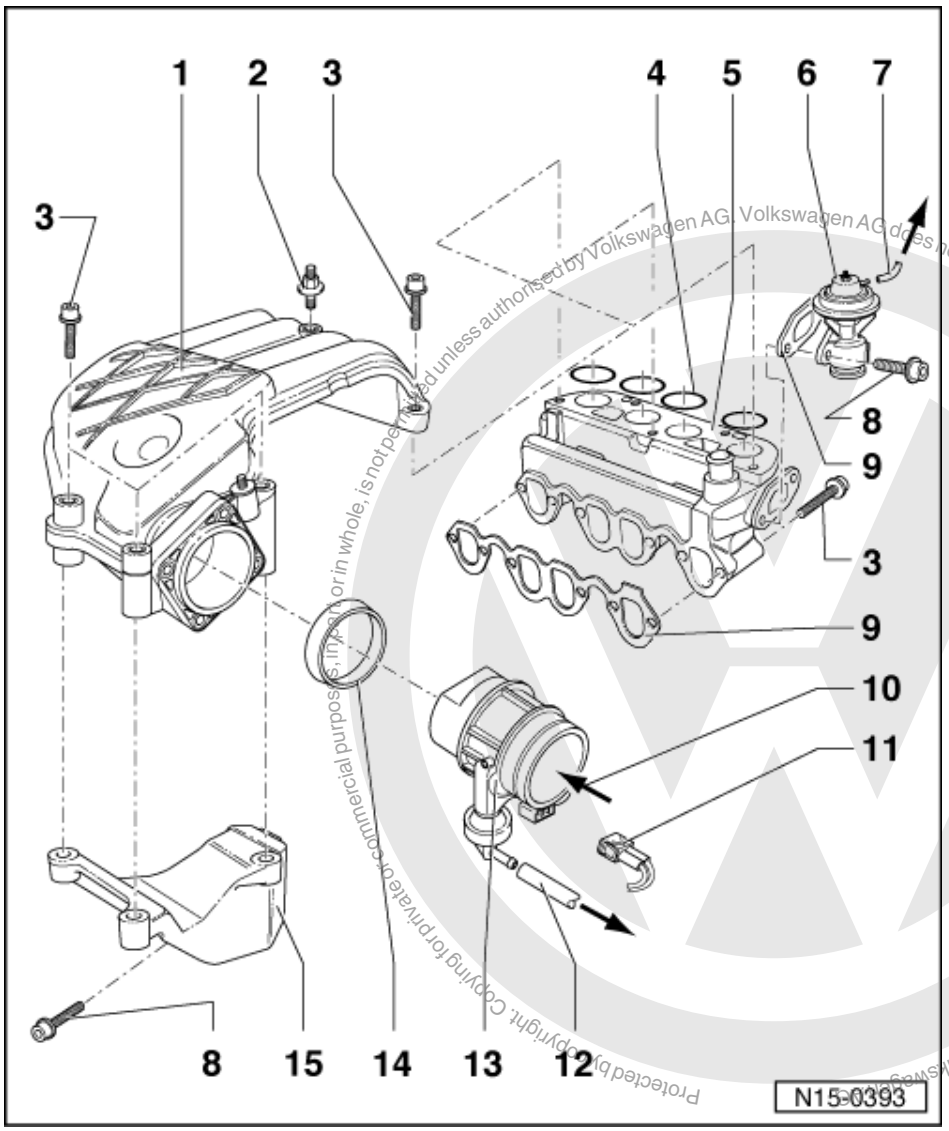

13 Air intake connecting piece

- Only renew complete
- With intake manifold flap change-over valve (N239) and intake manifold flap
- Removing and installing
  => Page 75
- Checking intake manifold flap change-over valve (N239)
  => Page 24 , Final control diagnosis
- Checking intake manifold flap change-over => Page 112

14 Seal

- Observe fitting position
- Renew if damaged

15 Bracket

satelettronica

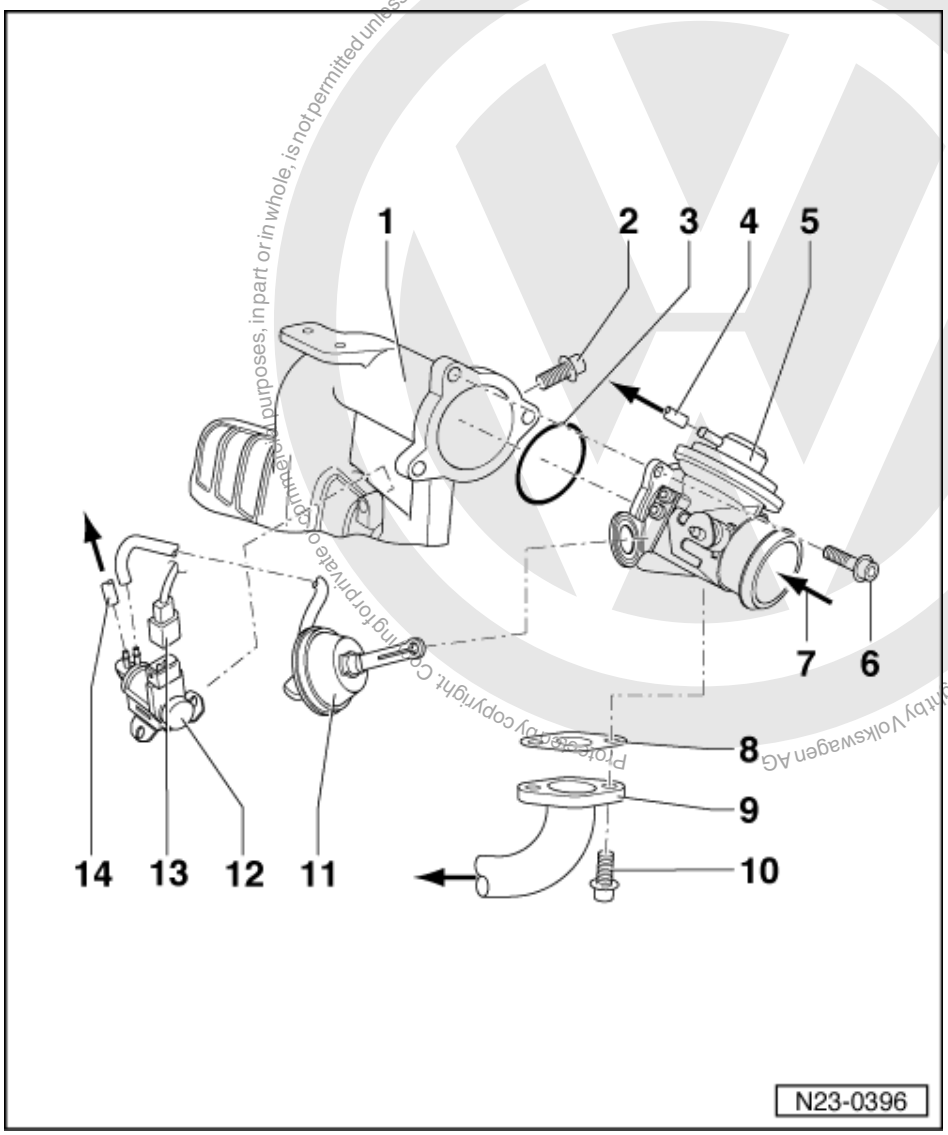

Engine codes AGR, ALH, ASV

1 Intake manifold
2 10 Nm
3 O ring
- Renew

4 Vacuum pipe
- To EGR valve (N18)

5 Air intake connecting piece
- With exhaust gas recirculation valve and intake manifold flap
- Checking intake manifold flap change-over => Page 112
- Checking EGR valve:

=> Repair group 26; Exhaust gas recirculation system Exhaust gas recirculation system

Protected by copyright. Copying for private or commercial purposes, in part or in whole, is not permitted unless authorised by Volkswagen AG. Volkswagen AG does not guarantee or accept any liability with respect to the correctness of information in this document. Copyright by Volkswagen AG.
satelettronica

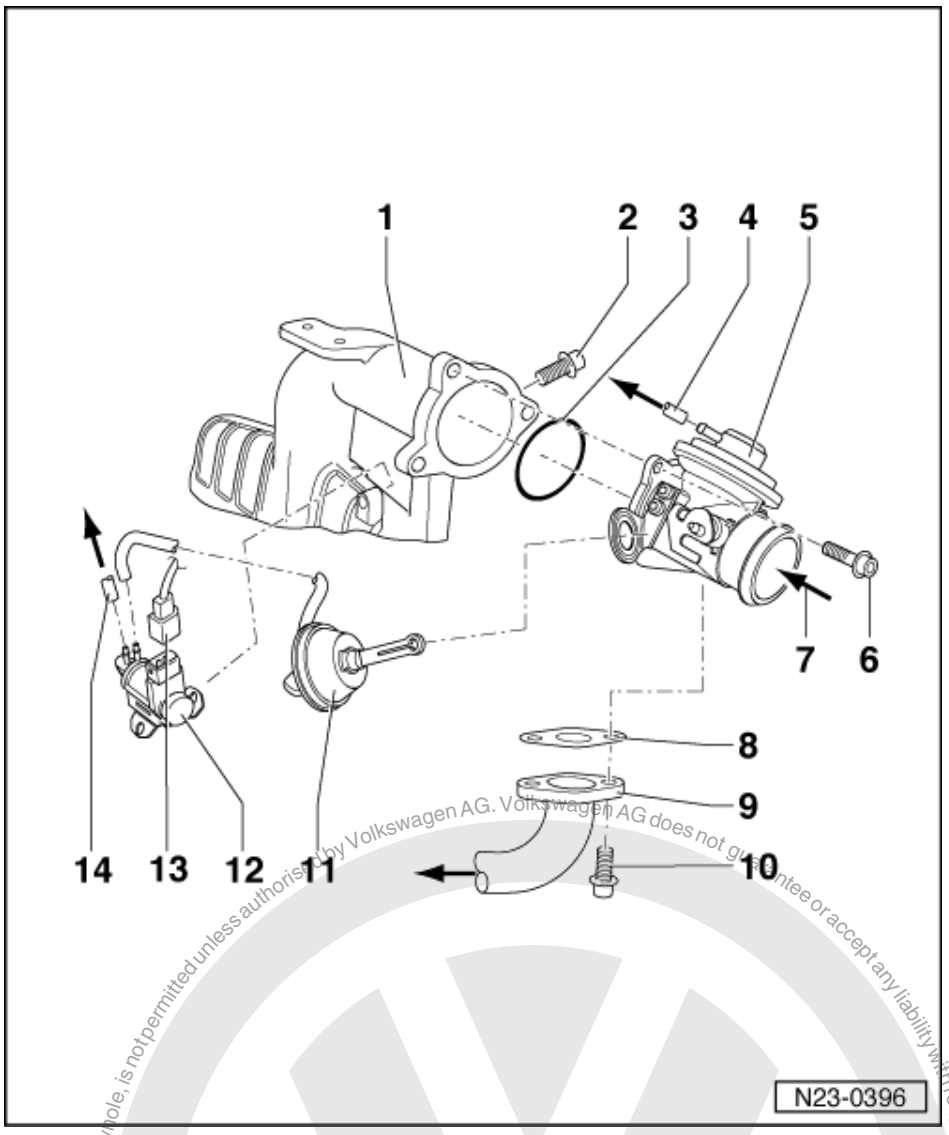

6 10 Nm
7 From charge air cooler

=> Repair group 21; Charge air system with turbocharger; Removing and installing parts of charge air cooling system Charge air system with turbocharger Removing and installing parts of charge air cooling system

8 Gasket
- Renew

9 Connecting pipe
- To exhaust manifold:

=> Repair group 26; Removing and installing parts of exhaust system Removing and installing parts of exhaust system

10 25 Nm
11 Vacuum control element
- Checking intake manifold flap change-over => Page 112

12 Intake manifold flap change-over valve (N239)
- Checking => Page 114

satelettronica

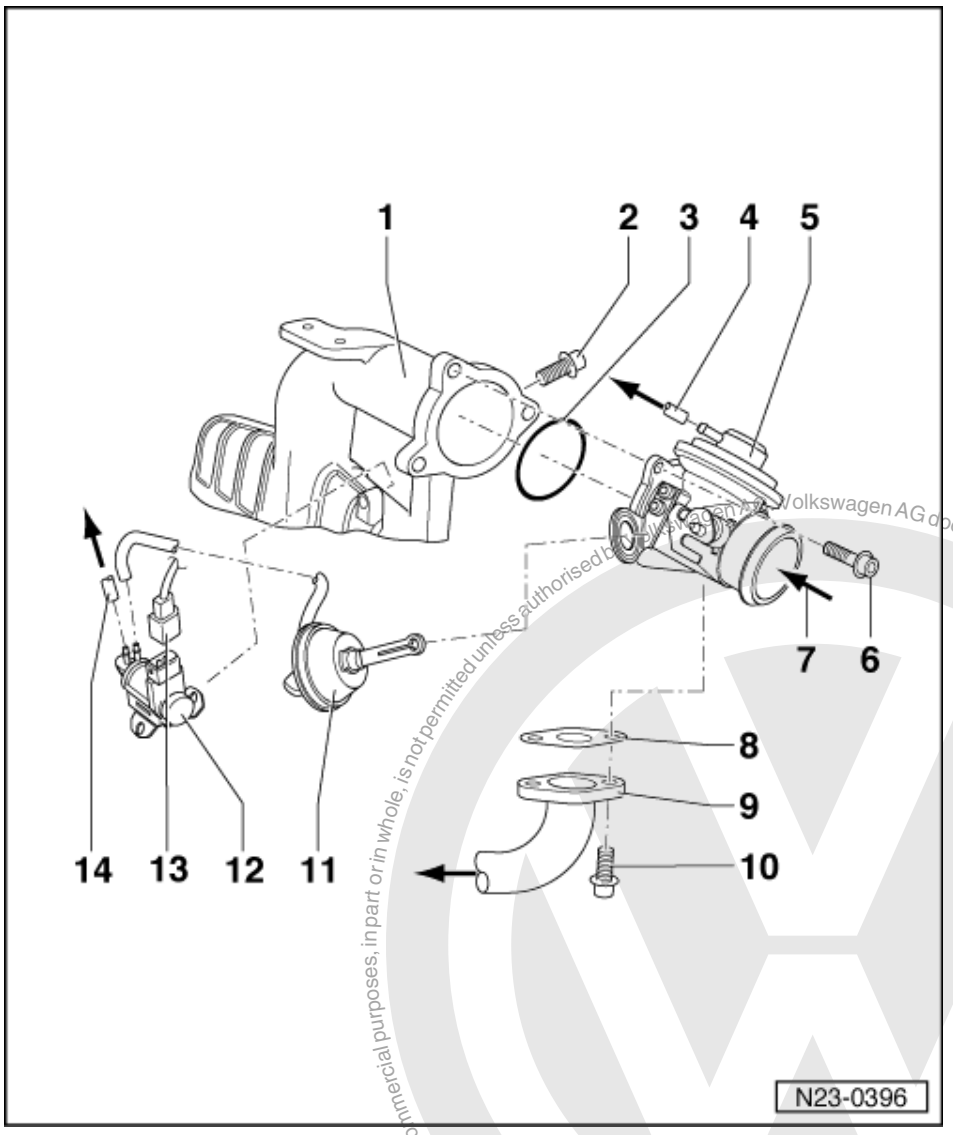

13 Connector
- Black, 2-pin
- For intake manifold flap change-over valve (N239)

14 Vacuum pipe
- To non-return valve/vacuum pump branch piece

Protected by copyright. Copying for private or commercial purposes, in part or in whole, is not permitted unless authorised by Volkswagen AG. Volkswagen AG does not guarantee or accept any liability with respect to the correctness of information in this document. Copyright by Volkswagen AG.
satelettronica

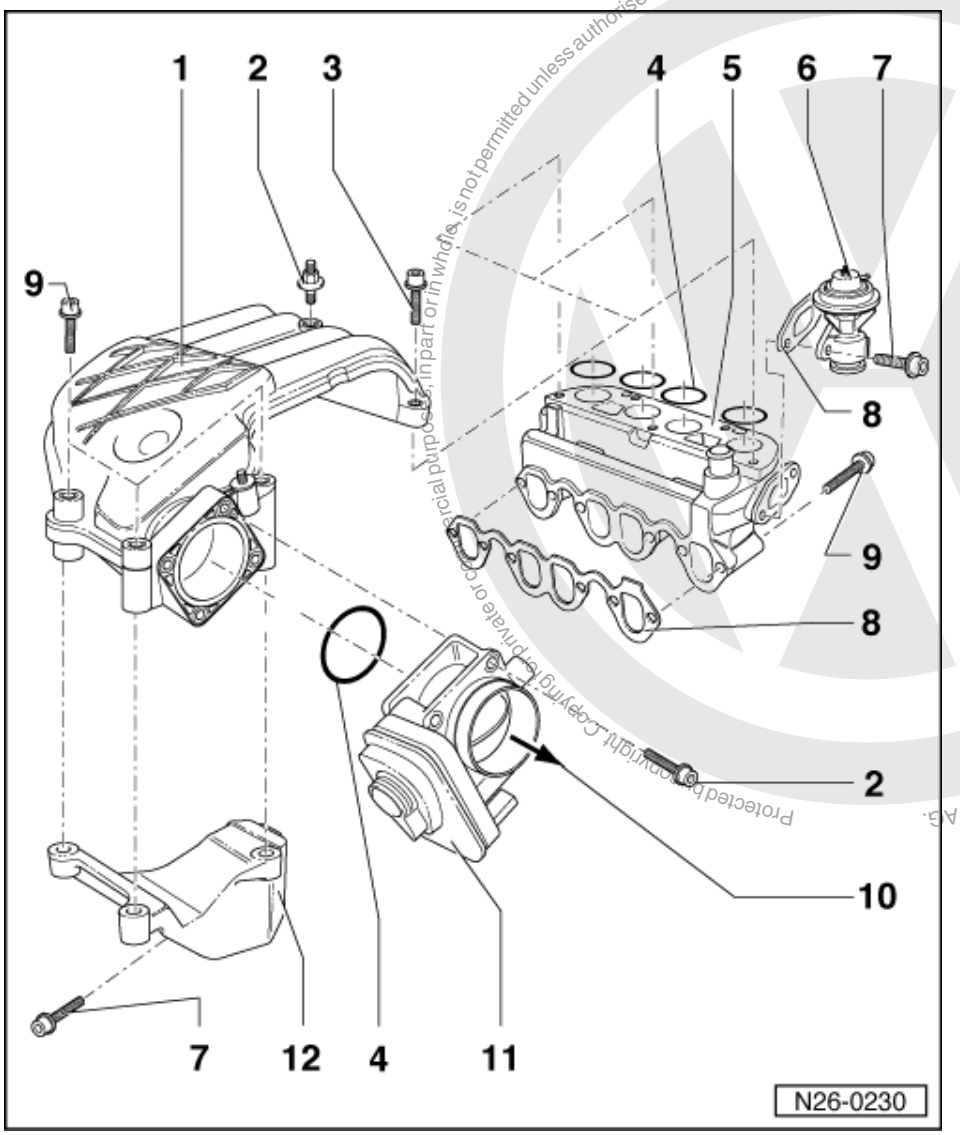

Engine code AYQ

1 Intake manifold - upper part
2 10 Nm
3 15 Nm
4 O ring
- Renew

5 Intake manifold - lower part
6 Exhaust gas recirculation valve (mechanical)
- Checking:

=> Repair group 26; Exhaust gas recirculation system Exhaust gas recirculation system

7 25 Nm
8 Gasket
- Renew

9 20 Nm

satelettronica

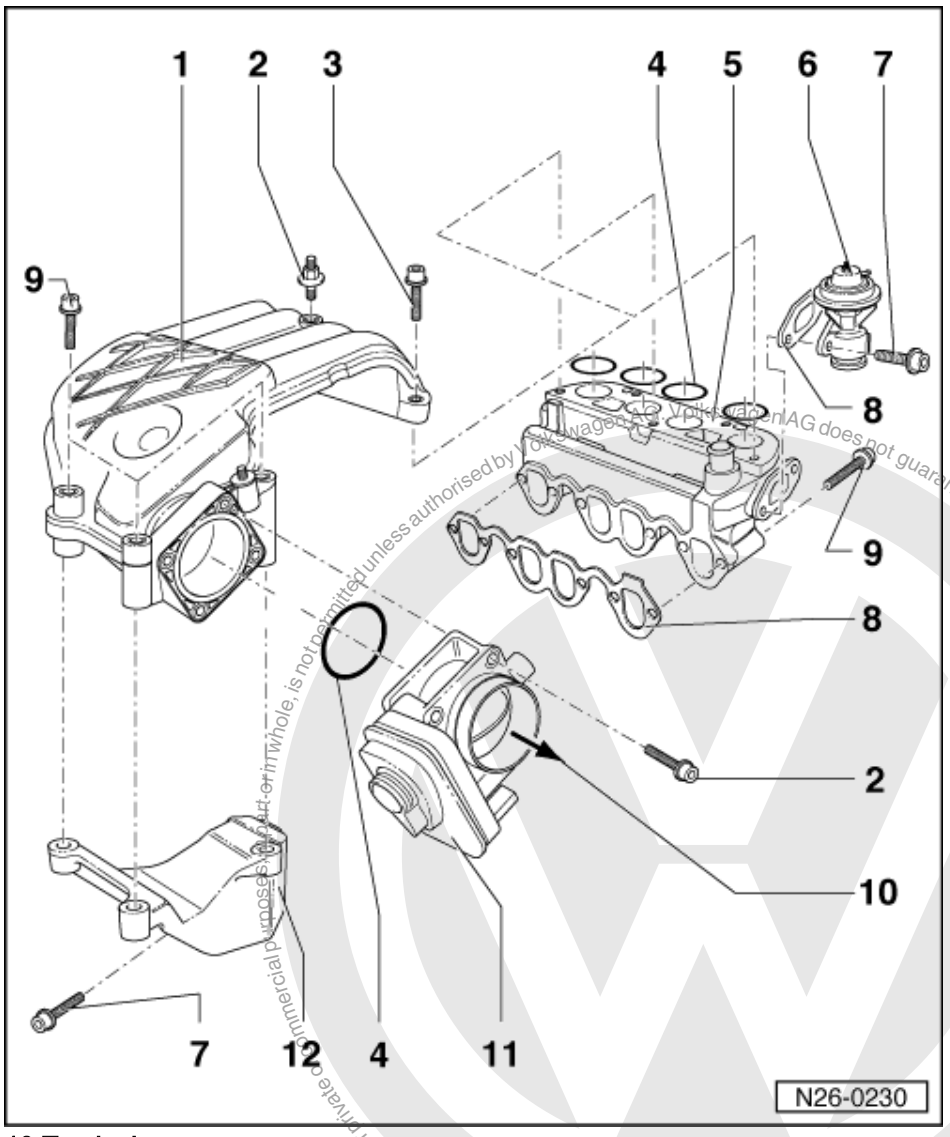

10 To air cleaner
11 Intake manifold flap motor (V157)
- Checking=>Page 117

12 Bracket

Protected by copyright. Copying for private or commercial purposes, in part or in whole, is not permitted unless authorised by Volkswagen AG. Volkswagen AG does not guarantee or accept any liability with respect to the correctness of information in this document. Copyright by Volkswagen AG.
satelettronica

1.7 - Removing and installing air intake connecting piece

Engine codes AGP, AQM

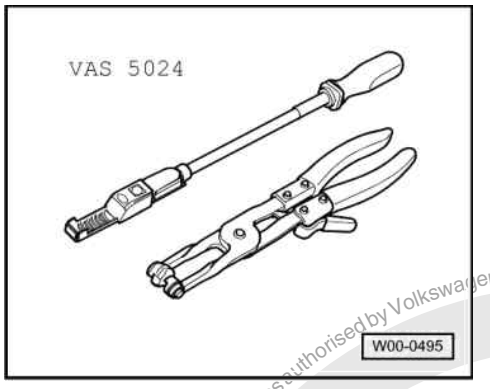

Special tools, workshop equipment, testers, measuring instruments and auxiliary items required

- VAS 5024 Assembly tool for spring-type clips

Removing

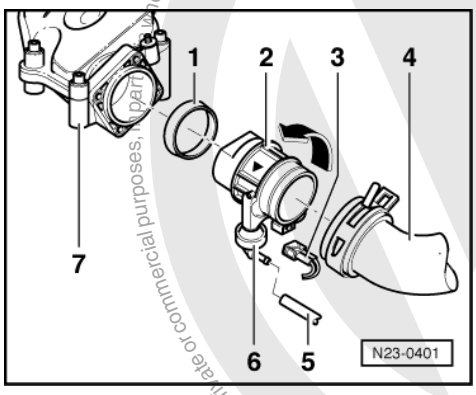

- -> Remove connecting hose -4- between air cleaner and air intake connecting piece from air intake connecting piece -2-.
- Pull 2-pin connector -3- off intake manifold flap change-over valve (N239).
- Pull vacuum hose -5- off vacuum unit -6-.
- Release air intake connecting piece -2- by turning to left -arrow- out of bayonet connection and remove.
- Remove seal -1- from intake manifold upper part -7-.

Installing

Installation of air intake connection piece is carried out in the reverse order.

Note:

Renew seal -1-if damaged.

satelettronica

1.8 - Removing and installing injection pump

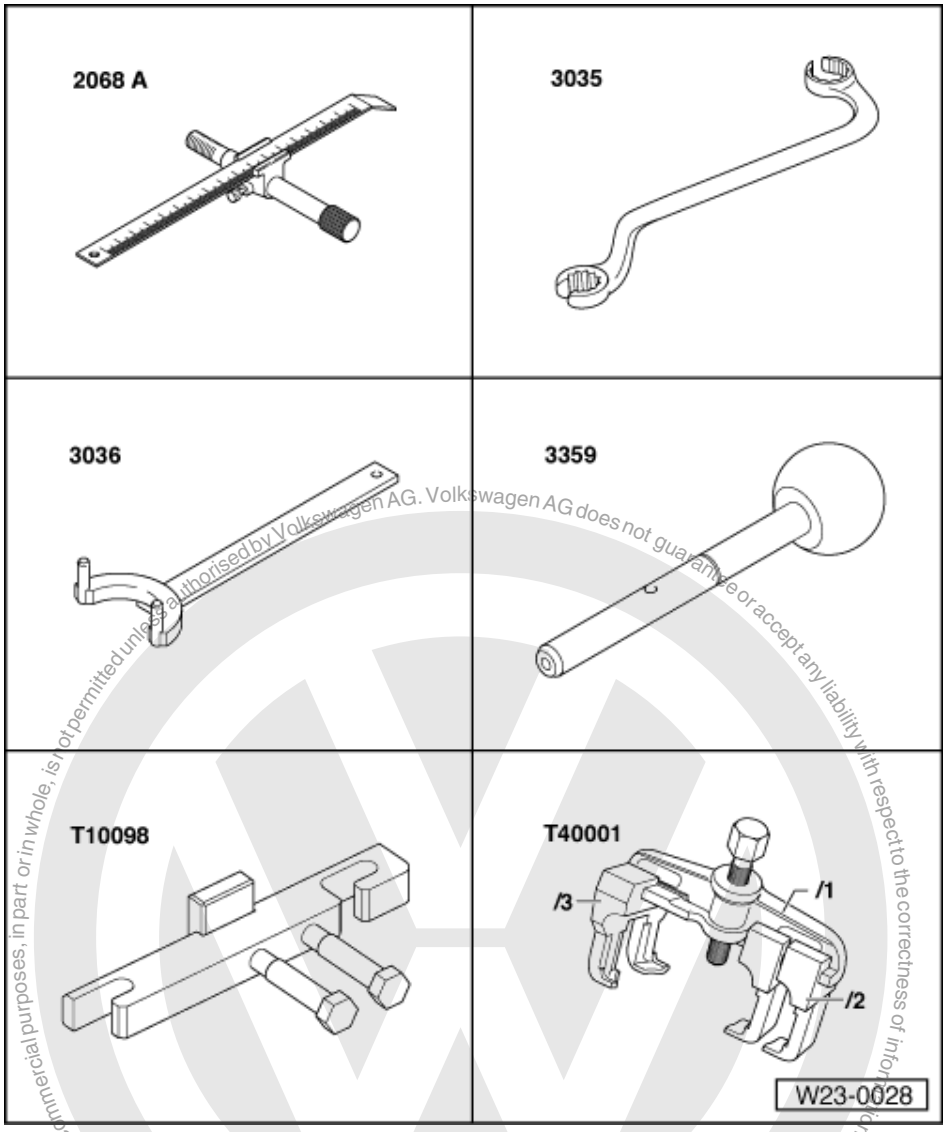

Protected by copyright. Copying for private or commercial purposes, in part or in whole, is not permitted unless authorised by Volkswagen AG. Volkswagen AG does not guarantee or accept any liability with respect to the correctness of information in this document. Copyright by Volkswagen AG.

satelettronica

Special tools, workshop equipment, test and measuring appliances and aux. items required

- 2068 A TDC setting device
- 3035 Open ring spanner
- 3036 Counter hold tool
- 3359 Locking pin
- T10098 Camshaft bar
- T40001 Puller

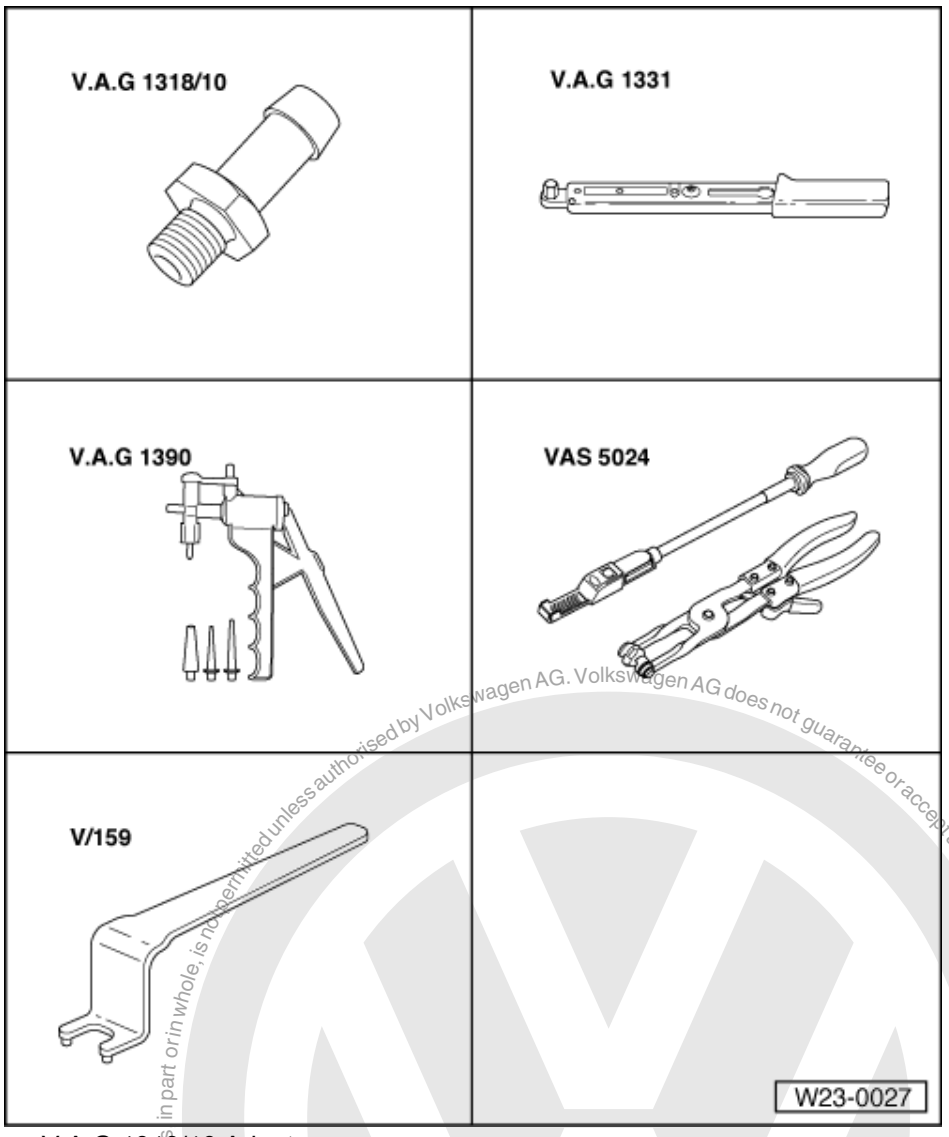

- V.A.G 1318/10 Adapter
- V.A.G 1331 Torque wrench (5...50 Nm)
- V.A.G 1390 Hand vacuum pump
- VAS 5024 Assembly tool for spring-type clamps
- V/159 Pin wrench Matra
  (for engines with engine codes AGR, ALH, ASV)
- Hexagon key
  (for engines with engine codes AGP, AQM, AYQ)

Removing

- Relieve toothed belt tension and take toothed belt off camshaft and injection pump sprockets:

=> Repair group 15; Removing and installing cylinder head; Removing, installing and tensioning toothed belts
Removing and installing cylinder head Removing, installing and tensioning toothed belts

Note:

The vibration damper/belt pulley and the centre and lower toothed belt guard can remain installed.

- Unbolt all fuel lines at fuel pump.

Notes:

- To remove injector pipe set, use open ring spanner 3035.

Protected by copyright. Copying for private or commercial purposes, in part or in whole, is not permitted unless authorised by Volkswagen AG. Volkswagen AG does not guarantee or accept any liability with respect to the correctness of information in this document. Copyright by Volkswagen AG.
satelettronica

- To not alter the shapes of the bends.

- Cover openings with a clean cloth.

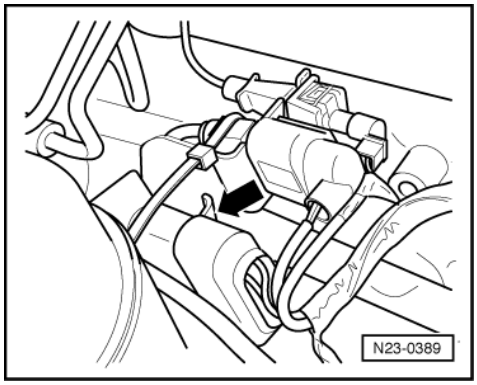

- -> Separate 10-pin connector to injection pump -arrow- and pull connector out of bracket.

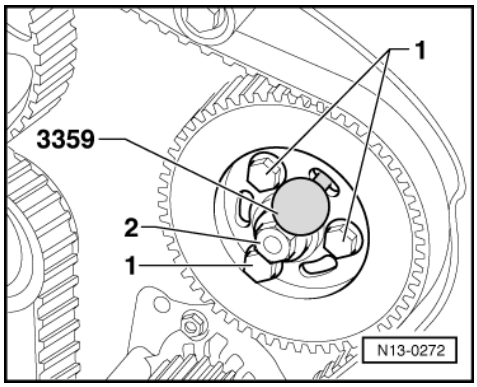

- -> Remove injection pump sprocket securing bolts -1-.

Note:

On no account must the nut -2- for the hub be loosened. Otherwise the injection pump basic setting will be altered and this cannot be reset with normal workshop equipment.

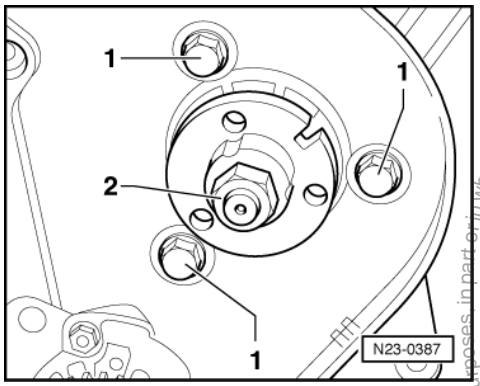

- -> Remove securing bolts -1- from compact bracket.

satelettronica
Protected by copyright. Copying for private or commercial purposes, in part or in whole, is not permitted unless authorised by Volkswagen AG. Volkswagen AG does not guarantee or accept any liability with respect to the correctness of information in this document. Copyright by Volkswagen AG.

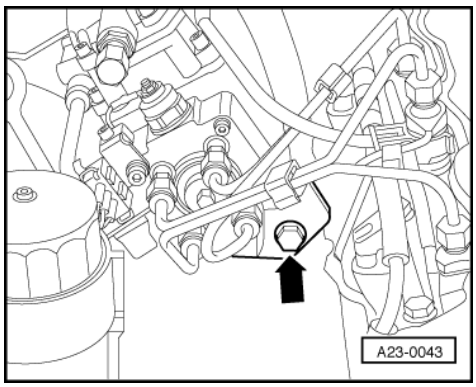

- -> Then remove bolt from rear support -arrow-.
- Take off injection pump.

Installing

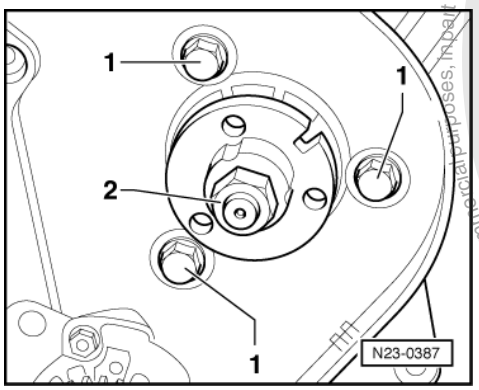

- Insert injection pump into compact bracket and then tighten securing nut on securing bolt of rear support first.
- -> Screw in securing bolts -1- and tighten.
  Tightening torque: 25 Nm

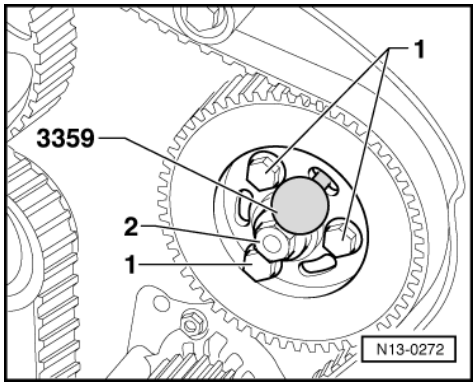

- -> Loosely bolt injection pump sprocket to hub with securing bolts -1-.
  - When doing this, observe the different versions of injection pump sprocket securing bolts =>Page 66 , Fig. 1 .
- Lock injection pump sprocket with pin 3359.
- Align injection pump sprocket to central position in elongated holes.

- Loosen the camshaft securing bolts a full turn. To loosen the camshaft sprocket securing bolts, use counter-hold tool 3036 to hold the camshaft sprocket.

Protected by copyright. Copying for private or commercial purposes, in part or in whole, is not permitted unless authorised by Volkswagen AG. Volkswagen AG does not guarantee or accept any liability with respect to the correctness of information in this document. Copyright by Volkswagen AG.
satelettronica

Note:

Never use camshaft bar T10098 as a counter-hold when loosening and tightening the camshaft sprocket. Use counter-hold tool 3036.

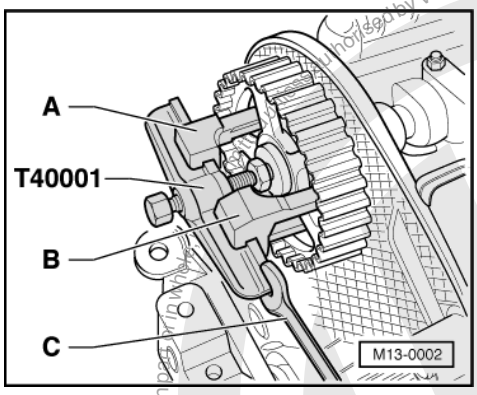

- -> Place puller T40001 with single leg T40001/2 -A- and double leg T40001/3 -B- centrally on the camshaft sprocket and pull it off.

  Use an open ended spanner -C- to counter-hold when doing this.

- Take camshaft sprocket off.
- Check whether TDC mark on flywheel and reference mark are aligned.
- Place tooth belt on injection pump sprocket and tensioning roller.
- Fit camshaft sprocket into toothed belt and secure sprocket so that the camshaft can still turn.

- Tensioning toothed belt:

=> Repair group 15; Removing and installing cylinder head; Removing, installing and tensioning toothed belt
Removing and installing cylinder head Removing, installing and tensioning toothed belt

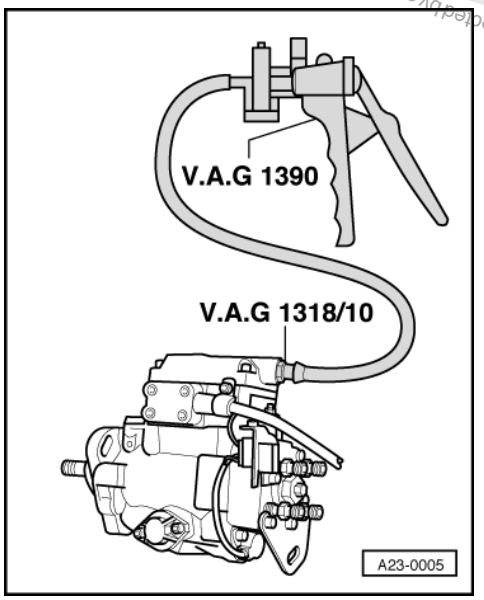

- Reconnect injection pipes, fuel supply pipe and electrical wiring.

-> Fill injection pump with Diesel as follows.

- Screw adapter 1318/10 into injection pump return supply opening.
- Connect hand vacuum pump 1390 with approx. 1 m transparent plastic hose to adapter.
- Operate vacuum pump until fuel flows out of return supply opening. Do not draw fuel into vacuum pump.
- Remove adapter and connect return supply pipe.

Protected by copyright. Copying for private or commercial purposes, in part or in whole, is not permitted unless authorised by Volkswagen AG. Volkswagen AG does not guarantee or accept any liability with respect to the correctness of information in this document. Copyright by Volkswagen AG.
satelettronica

- Dynamically check commencement of injection and adjust if necessary =>Page 81 .

1.9 - Dynamically checking and adjusting commencement of injection

Notes:

- Dynamically checking and correcting commencement of injection is only possible in function 04 "Engine basic setting".
- The commencement of injection must always be checked after renewing the toothed belt or loosening the injection pump bolts or toothed belt sprockets and if necessary adjusted.

Special tools, workshop equipment, testers, measuring instruments and auxiliary items required

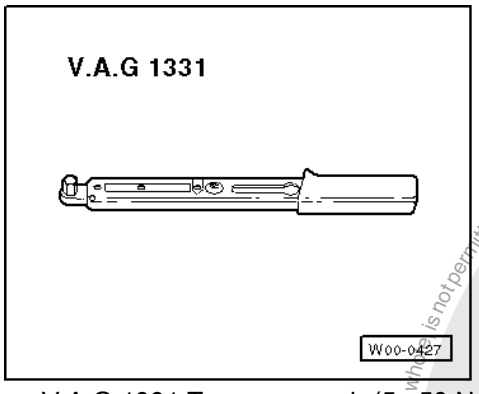

- V.A.G 1331 Torque wrench (5...50 Nm)
- Fault reader V.A.G 1551 (or vehicle system tester V.A.G 1552) with cable V.A.G 1551/3

Checking and adjustment conditions

- Mechanical engine basic setting OK.
- Toothed belt tension OK.

Work sequence

- Connect fault reader V.A.G 1551 (V.A.G 1552) and select engine electronics control unit with the "Address word" 01. When doing this the engine must be running at idling speed.
  (Connecting fault reader and selecting engine electronics control unit => Page 2 .)

-> Indicated on display:

```
Rapid data transfer      HELP
Select function XX
```

- Press keys 0 and 4 for the function "Introduction of basic setting" and confirm entry with Q key.

-> Indicated on display:

```
Basic setting
Input display group number XXX
```

- Press key 0 three times for "Display group number 0" and confirm entry with Q key.

-> Indicated on display:
(1...10 = Display zones)

```
System in basic setting 0
     1     2     3     4     5     6
7     8     9     10
```

- Check coolant temperature in display zone 7.

Printed by copyright. Copying for private or commercial purposes, in part or in whole, is not permitted unless authorised by Volkswagen AG. Volkswagen AG does not guarantee or accept any liability with respect to the correctness of information in this document. Copyright by Volkswagen AG.
satelettronica

Specification: less than 73 (equates to 85 °C)

Continue with check only when coolant temperature is attained.

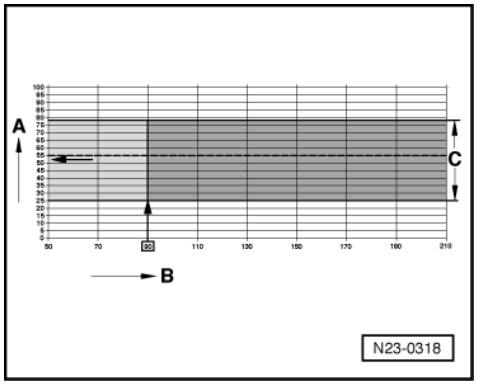

Engine codes AGP, AQM, AYQ

The commencement of injection in display zone 2 is not dependent on the fuel temperature in display zone 9.

-> A - Display zone 2 commencement of injection
B - Display zone 9 fuel temperature
C - Specified range for commencement of injection

Example:

The numerical value 90 in display zone 9 (B) corresponds to a numerical value range of 25...78 in display zone 2 (A).

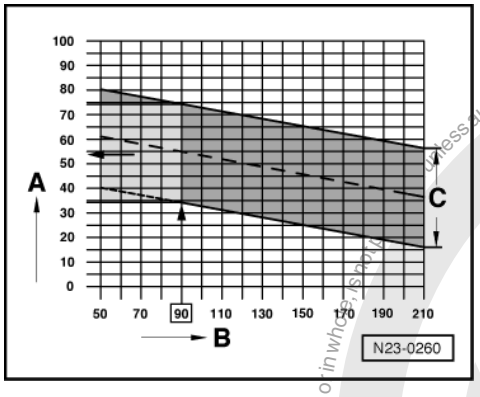

Engine codes AGR, ALH, ASV

The commencement of injection in display zone 2 is dependent on the fuel temperature in display zone 9.

-> A - Display zone 2 commencement of injection
B - Display zone 9 fuel temperature
C - Specified range for commencement of injection

Example:

The numerical value 90 in display zone 9 (B) corresponds to a numerical value range of 34...73 in display zone 2 (A).

Protected by copyright. Copying for private or commercial purposes, in part or in whole, is not permitted unless authorised by Volkswagen AG. Volkswagen AG does not guarantee or accept any liability with respect to the correctness of information in this document. Copyright by Volkswagen AG.
satelettronica

Continued for all engine codes

Note:

If the commencement of injection lies in the specified range -C- during the test, no new adjustment is required. After repairs such as removing and installing the injection pump or adjusting injection pump timing, set the commencement of injection to the mean value (broken line) of the specified range -C-.

- Press the ⇒key.
- Press keys 0 and 6 for the "End output" function and confirm input with the Q key.
- Switch off ignition.

If the commencement of injection (timing) is outside the specification tolerances, adjust commencement of injection as follows:

Engine codes AGR, ALH, ASV

- Remove connecting pipe between charge air cooler and intake manifold connecting hose.

Continued for all engine codes

- Remove upper toothed belt guard.

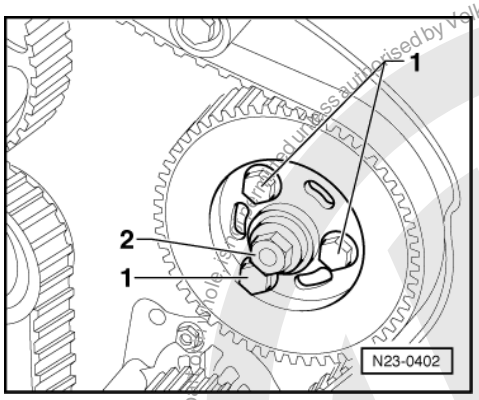

- -> Loosen two injection pump sprocket securing bolts -1-.
- Fit a 22 mm AF ring spanner onto the hub nut -2- to counter-hold the pump shaft.
- Loosen the 3rd injection pump sprocket securing bolt and turn the pump shaft slightly:
  To left = retards commencement of injection
  To right = advances commencement of injection

Note:

On no account must the nut -2- for the hub be loosened. Otherwise the injection pump basic setting will be altered and this cannot be reset with normal workshop equipment.

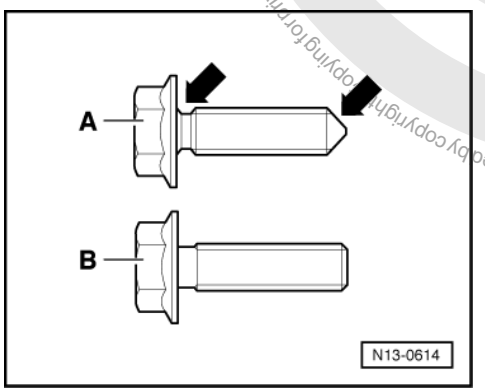

Version -A-: Securing bolts with chamfer on shaft and point -arrows-

- Tighten new injection pump sprocket securing bolts.

Protected by copyright. Copying for private or commercial purposes, in part or in whole, is not permitted unless authorised by Volkswagen AG. Volkswagen AG does not guarantee or accept any liability with respect to the correctness of information in this document. Copyright by Volkswagen AG.
satelettronica

Tightening torque: 20 Nm

Notes:

- After dynamic test of commencement of injection, securing bolts must be tightened 90°(1/4turn) further.
- Because they are stretch bolts they must only be used once.

Version -B-: Securing bolts without chamfer on shaft and without point

- Tighten old injection pump sprocket securing bolts.
  Tightening torque: 25 Nm

Note:

Do not renew securing bolts.

Continuation for all versions

- Observe value in zone 2 and, if necessary, repeat adjustment until the displayed value stays at the mean value of specified range -C-.

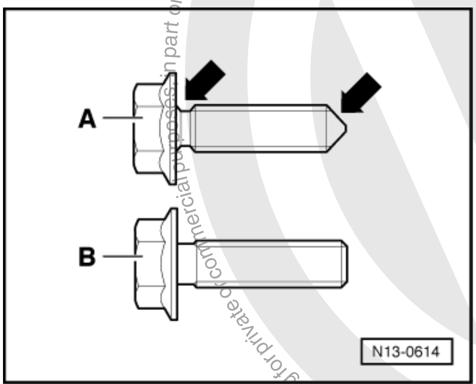

Version -A-: Securing bolts with chamfer on shaft and point -arrows-

- Tighten new injection pump sprockets securing bolts 1/4 turn (90°) further.

Continuation for all versions

- Press the ⇒key.
- Press keys 0 and 6 for the "End output" function and confirm input with the Q key.
- Switch off ignition.

Engine codes AGR, ALH, ASV

- Install connecting pipe between charge air cooler and intake manifold connecting pipe
  Tightening torque: 10 Nm

Continued for all engine codes

- Install upper toothed belt guard.

1.10 - Removing and installing injectors

Special tools, workshop equipment, testers, measuring instruments and auxiliary items required

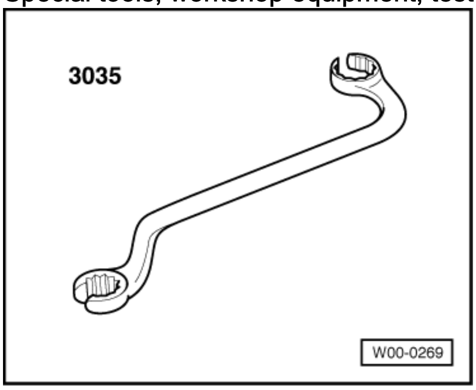

Protected by copyright. Copying for private or commercial purposes, in part or in whole, is not permitted unless authorised by Volkswagen AG. Volkswagen AG does not guarantee or accept any liability with respect to the correctness of information in this document. Copyright by Volkswagen AG.

sateletronica

- 3035 Ring spanner

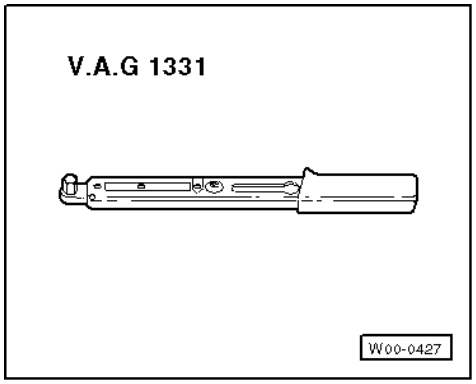

- V.A.G 1331 Torque wrench (5...50 Nm)

Note:

Defective injectors cause the following faults:

- Misfiring
- Knocking in one or more cylinders
- Engine over-heating
- Loss of power
- Excessive black exhaust smoke
- Higher fuel consumption
- Excessive blue smoke when starting from cold

Defective injectors can be located by loosening the high pressure pipe union on each injector in turn with the engine running at a fast idling speed. If engine speed remains constant after loosening a pipe union, this indicates a defective injector.

Removing

Engine codes AGP, AQM, AYQ

- Remove intake manifold upper part
  => Page 67 , Dismantling and assembling parts of intake manifold.

Engine codes AGR, ALH, ASV

- Remove connecting pipe between charge air cooler and intake manifold connecting hose.

Continued for all engine codes

- Remove injection pipes with an slotted ring spanner 3035.

Note:

Always remove pipe set complete. Do not alter pipe shape.

- Remove securing nut, take off retainer and take out injector.

Installing

Note:

Always renew heat insulating seal between cylinder head and injectors.

- Insert injector.
- Check mounting is seated correctly in cylinder head.

Protected by copyright. Copying for private or commercial purposes, in part or in whole, is not permitted unless authorised by Volkswagen AG. Volkswagen AG does not guarantee or accept any liability with respect to the correctness of information in this document. Copyright by Volkswagen AG.
satelettronica

- Fit retainer.

Tightening torques:
Injection pipes = 25 Nm
Retainer screw = 20 Nm

Engine codes AGP, AQM, AYQ

- Install intake manifold upper part.
  => Page 67 , Dismantling and assembling parts of intake manifold.

Engine codes AGR, ALH, ASV

- Install connecting pipe between charge air cooler and intake manifold connecting pipe
  Tightening torque: 10 Nm

1.11 - Checking injectors

This engine is equipped with dual spring injectors. The fuel injected therefore occurs in 2 stages.
If faults occur with these injectors then they are to be exchanged as neither servicing nor pressure setting is possible.

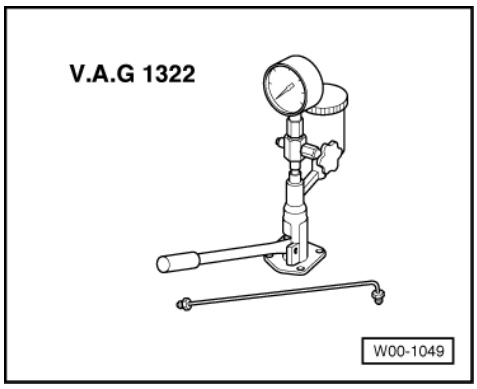

Special tools, workshop equipment, testers, measuring instruments and auxiliary items required

- Injector test unit V.A.G 1322 with pressure pipe V.A.G 1322/2

Test conditions

- Pressure gauge on

Checking injection pressure

Warning!
When testing injectors ensure that the jet of fuel does not contact the hands as the high pressure will cause the fuel to penetrate the skin and may cause severe injuries.

- Remove injectors =>Page 84 .

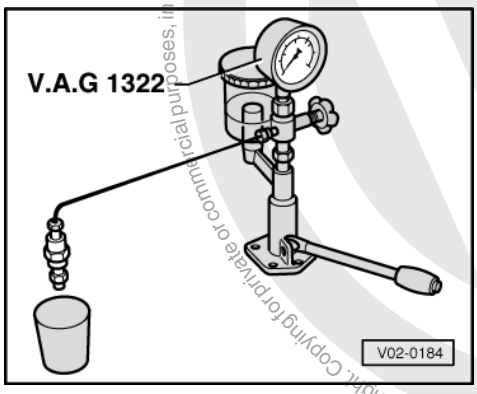

Protected by copyright. Copying for private or commercial purposes, in part or in whole, is not permitted unless authorised by Volkswagen AG. Volkswagen AG does not guarantee or accept any liability with respect to the correctness of information in this document. Copyright by Volkswagen AG.
satelettronica

- -> Connect injector to injector test unit.
- Press pump lever down slowly. When spray begins, read off opening pressure. For deviations from specification renew injector.

Engine codes AGP, AGR, AQM, AYQ

Specification:
New injectors: 190 ... 200 bar
Wear limit: 170 bar

Engine code ALH, ASV

Specification:
New injectors: 220 ... 230 bar
Wear limit: 200 bar

Checking for leaks

- Move pump lever down slowly and maintain a pressure of approx. 150 bar for 10 seconds. No fuel should leak from the nozzle tip.
- If injector leaks, replace.

1.12 - Renewing injection timing device cover O-ring

- Place a clean cloth under the injection pump.

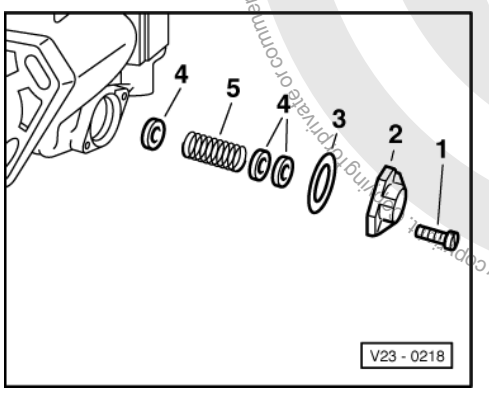

- -> Remove cover screws -1- with commercially available key for Torx socket head screws, e.g. Hazet 2115-T30.
- Remove cover -2- and clean it.
- Renew O-ring -3- and install cover with existing shims -4-.

2 - Checking components and functions

2.1 - Checking components and functions

2.2 - Checking Diesel direct injection system voltage supply

Special tools, workshop equipment, testers, measuring instruments and auxiliary items required

- Hand multimeter V.A.G 1526 or multimeter V.A.G 1715
- Adapter set V.A.G 1594
- Test box V.A.G 1598/22

Protected by copyright. Copying for private or commercial purposes, in part or in whole, is not permitted unless authorised by Volkswagen AG. Volkswagen AG does not guarantee or accept any liability with respect to the correctness of information in this document. Copyright by Volkswagen AG.
satelettronica

- Current flow diagram

Check conditions

- The fuses must be OK.
- Earth connection in plenum chamber OK.
- The battery voltage must be at least 11.5 V.
- All electrical consumers, e.g. lights and rear window heating must be switched off.

Test sequence

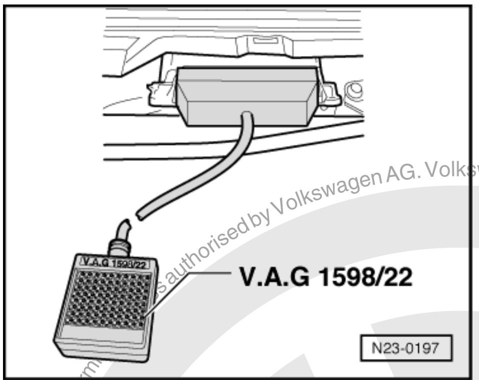

- -> Connect test box V.A.G 1598/22 to control unit wiring harness.
- Bridge sockets 33+1 with auxiliary cables from V.A.G 1594.
- Measure voltage between following sockets:
  1+2, 1+28, 2+27 and 27+28
  Specification: approx. battery voltage

If the specification is not obtained:

- Check voltage supply relay terminal 30 (J317).

=> Current flow diagrams, Electrical fault finding and Fitting locations

- Check wiring connections for open circuit, short circuit and transfer resistance at contacts according to current flow diagram.

If no fault is found in wiring and relay:

- Replace engine control unit
  => Page 130 .

2.3 - Checking engine speed sender

Function

The engine speed sender (G28) is a speed and reference mark sender. The engine will not start if there is no speed signal. If the speed signal fails when the engine is running, it will cause the engine to stall immediately.

Special tools, workshop equipment, testers, measuring instruments and auxiliary items required

- Hand multimeter V.A.G 1526 or multimeter V.A.G 1715
- Adapter set V.A.G 1594
- Test box V.A.G 1598/22

Protected by copyright. Copying for private or commercial purposes, in part or in whole, is not permitted unless authorised by Volkswagen AG. Volkswagen AG does not guarantee or accept any liability with respect to the correctness of information in this document. Copyright by Volkswagen AG.
sateletronica

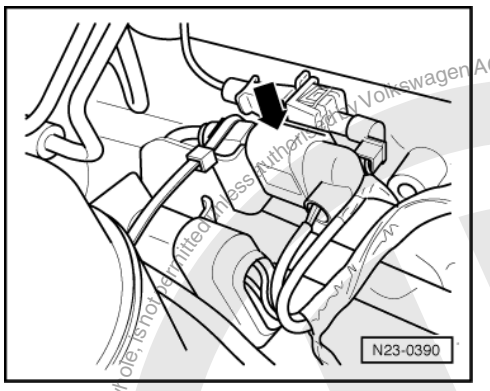

◆ Current flow diagram

Test sequence

- -> Separate black 3-pin connector to engine speed sender -arrow-.

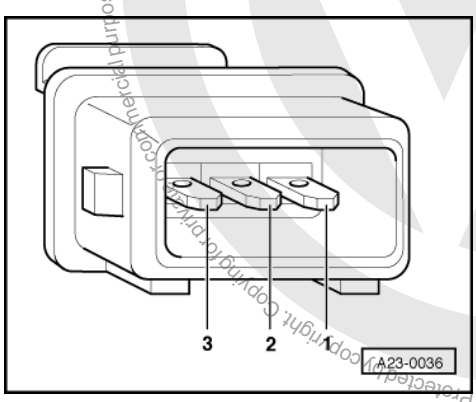

- -> Measure resistance between connector contacts 1+2.
  Specification: 1.0 ... 1.5 kω

If the specification is not obtained:

- Renew engine speed sender (G28):
  Engine codes AGP, AQM, AYQ
  =>Page 58 , item 16 .
- Interrogate fault memory, if necessary, repair any faults and then erase fault memory => Page 6 , interrogating and erasing fault memory.

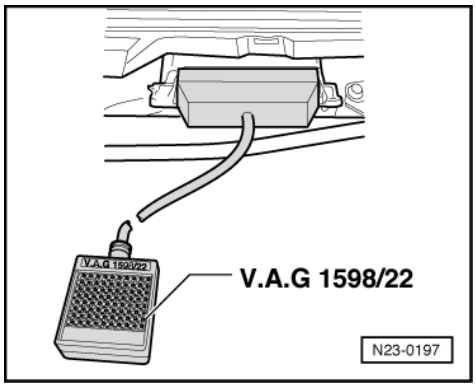

If no sender fault is detected:

- -> Connect test box V.A.G 1598/22 to control unit wiring harness.

Protected by copyright. Copyright by Volkswagen AG. Volkswagen AG does not guarantee or accept any liability with respect to the correctness of information in this document. Copyright by Volkswagen AG.
satelettronica

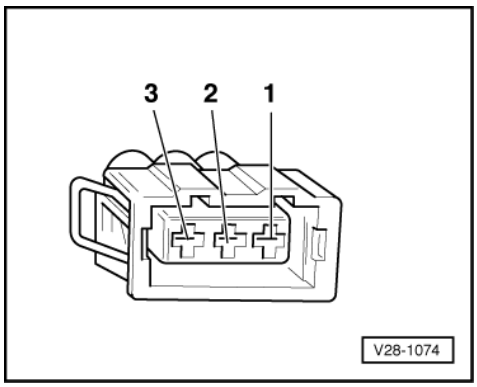

- -> Check wiring between test box and 3 pin connector for open circuit according to current flow diagram.
  Contact 1+ socket 69
  Contact 2+ socket 67
  Contact 3+ socket 71
  Wire resistance: max. 1.5 ω
- Check wiring at 3 pin connector for short circuit to one another according to current flow diagram.
  Specification: ∞ω

If no fault is detected in the wiring:

- Replace engine control unit
  => Page 130 .

2.4 - Checking intake manifold pressure sender and elevation sender

Engine codes AGR, ALH, ASV

Function

The elevation sender is located in the diesel direct injection system control unit. The intake manifold pressure sender is a separate component and is located together with the intake manifold temperature sender in a housing on connecting pipe for charge air cooler/air intake connecting piece.

Special tools, workshop equipment, testers, measuring instruments and auxiliary items required

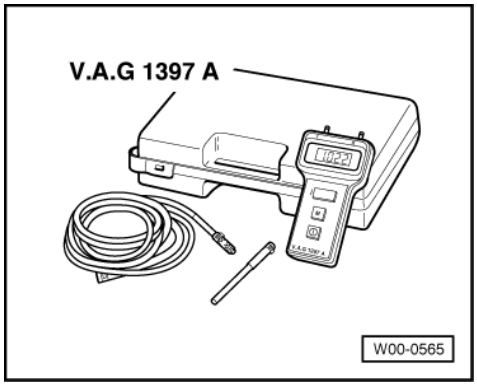

- V.A.G 1397 A Turbocharger tester
- Hand multimeter V.A.G 1526 or multimeter V.A.G 1715
- Fault reader V.A.G 1551 (or vehicle system tester V.A.G 1552) with cable V.A.G 1551/3
- Adapter set V.A.G 1594
- Test box V.A.G 1598/22
- Current flow diagram

Test sequence

- Connect the fault reader V.A.G 1551 (V.A.G 1552) and with ignition switched on select engine electronics control unit with the "Address word" 01.

Copyright. Copying for private or commercial purposes, in part or in whole, is not permitted unless authorised by Volkswagen AG. Volkswagen AG does not guarantee or accept any liability with respect to the correctness of information in this document. Copyright by Volkswagen AG.
satelettronica

(Connecting fault reader and selecting engine electronics control unit => Page 2 .)

-> Indicated on display:

```
Rapid data transfer      HELP
Select function XX
```

- Press keys 0 and 8 for the function "Read measured value block" and confirm entry with Q key.

-> Indicated on display:

```
Read measured value block
Input display group number XXX
```

- Press keys 0, 1 and 0 for "Display group number 10" and confirm entry with Q key.

```
Read measured value block 10
0 mg/H      1027 mbar      1013 mbar
0.0 %
```

-> Compare display in zone 2 (elevation sender -F96) with display in zone 3 (intake manifold pressure sender -G71) and display on turbocharger test unit V.A.G 1397/A with one another.
Specification: The pressures must be the same
(tolerance ± 30 mbar)

Note:

The turbocharger test unit is required to provide an independent figure for comparison. The turbocharger test unit must be set to measuring range I (absolute pressure). A barometer can be used instead.

If value in display zone 2 deviates:

- Press the ⇒key.
- Press keys 0 and 6 for the "End output" function and confirm input with the Q key.
- Switch off ignition.
- Replace engine control unit
  => Page 130 .

Value in display zone 3 deviates:

- Start engine and select function 08 "Read measured value block" again.

-> Indicated on display:

```
Read measured value block
Input display group number XXX
```

- Press keys 0, 1 and 0 for "Display group number 10" and confirm entry with Q key.

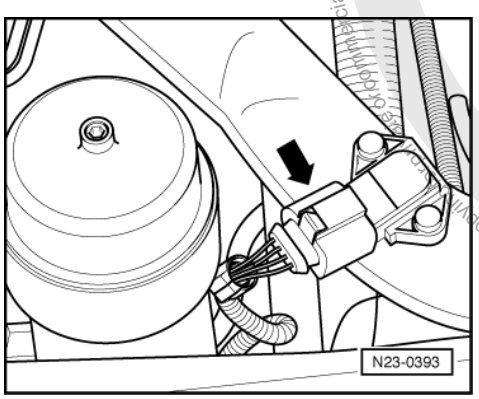

- -> Pull 4-pin connector -arrow- off intake manifold pressure sender (G71) with intake manifold pressure sender (G72).

- Observe figures in display zone 3 (intake manifold pressure sender).

```
Read measured value block 10
     515 mg/H      1009mbar      1009 mbar
0.0 %
```

satelettronica
Protected by copyright. Copyright by Volkswagen AG.

-> It must fall briefly to about 400 mbar and then assume the same value as the elevation sender (display zone 2).
- Press the ⇒key.
- Press keys 0 and 6 for the "End output" function and confirm input with the Q key.
- Switch off ignition.

If the specification is obtained:

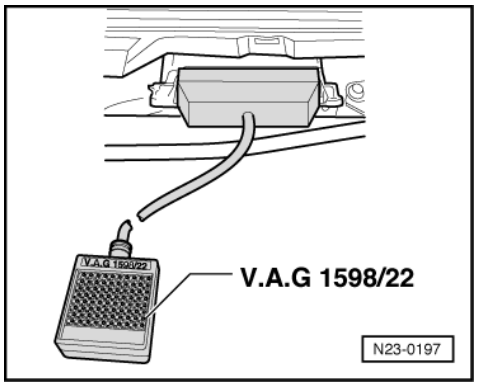

- Renew intake manifold pressure sender (G71) with intake manifold temperature sender (G72).
- Interrogate fault memory, if necessary, repair any faults and then erase fault memory => Page 6 , interrogating and erasing fault memory.

If the specification is not obtained:

- -> Connect test box V.A.G 1598/22 to control unit wiring harness.

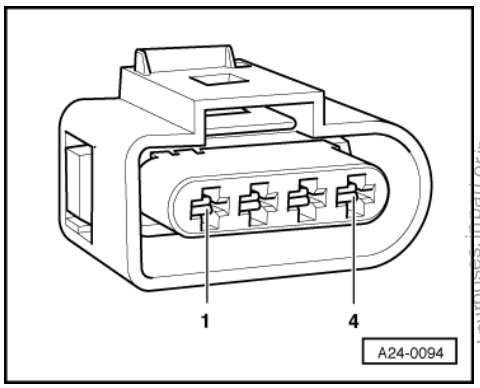

- -> Check wiring between test box and 4-pin connector for open circuit using current flow diagram.
  Contact 3+ socket 39
  Contact 4+ socket 40
  Wire resistance: max. 1.5 ω
- Additionally check wires for short to one another, to vehicle earth and to battery positive.
  Specification: ∞ω

If no fault is detected in the wiring:

- Replace engine control unit
  => Page 130 .

2.5 - Checking coolant temperature sender

Special tools, workshop equipment, testers, measuring instruments and auxiliary items required

- Hand multimeter V.A.G 1526 or multimeter V.A.G 1715
- Fault reader V.A.G 1551 (or vehicle system tester V.A.G 1552) with cable V.A.G 1551/3
- Adapter set V.A.G 1594
- Test box V.A.G 1598/22

Protected by copyright. Copying for private or commercial purposes, in part or in whole, is not permitted unless authorised by Volkswagen AG. Volkswagen AG does not guarantee or accept any liability with respect to the correctness of information in this document. Copyright by Volkswagen AG.
satelettronica

- Current flow diagram

Test conditions

- Engine must be cold.

Test sequence

- Connect fault reader V.A.G 1551 (V.A.G 1552) and select engine electronics control unit with the "Address word" 01. When doing this the engine must be running at idling speed.
  (Connecting fault reader and selecting engine electronics control unit => Page 2 .)

-> Indicated on display:

```
Rapid data transfer      HELP
Select function XX
```

- Press keys 0 and 8 for the function "Read measured value block" and confirm entry with Q key.

-> Indicated on display:

```
Read measured value block
Input display group number XXX
```

- Press keys 0, 0 and 7 for "Display group number 7" and confirm entry with Q key.

```
Read measured value block 7
15.4 5C          15.9 5C     16.7 5
```

-> Indicated on display:

- Observe coolant temperature figure in display zone 4. The temperature figure must Increase uniformly and without interruption.
- In case of faults the fuel temperature is displayed as a substitute.
- Press the ⇒key.
- Press keys 0 and 6 for the "End output" function and confirm input with the Q key.
- Switch off ignition.
- If no realistic display appears in display zone 4 or the fuel temperature is displayed as a substitute. Check coolant temperature sender and wiring connections to sender as follows:

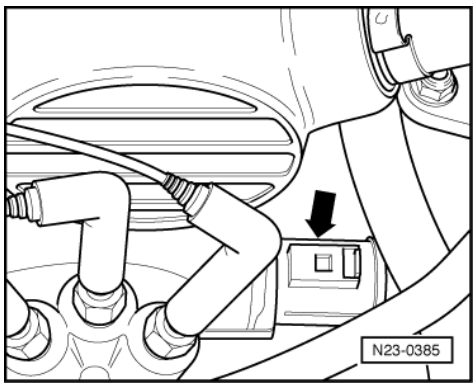

- -> Pull the 4 pin connector off coolant temperature sender (G62) with coolant temperature gauge sender (G2) -arrow-.

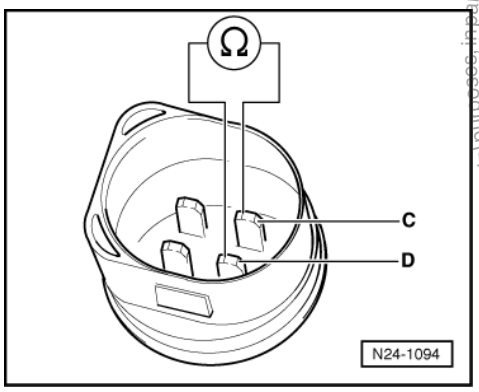

Protected by copyright. Copying for private or commercial purposes, in part or in whole, is not permitted unless authorised by Volkswagen AG. Volkswagen AG does not guarantee or accept any liability with respect to the correctness of information in this document. Copyright by Volkswagen AG.
satelettronica

- -> Measure resistance of coolant temperature sender between contacts C (signal) and D (earth).

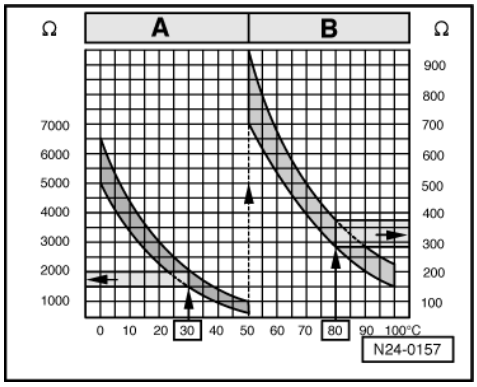

-> Specification see diagram

Scale A shows resistance values for temperature range 0...50 °C and scale B the values for temperature range 50...100 °C.

Examples:

- 30 °C corresponds to a resistance from 1500...2000 ω
- 80 °C corresponds to a resistance from 275...375 ω

If the specification is not obtained:

- Replace coolant temperature sender (G62).

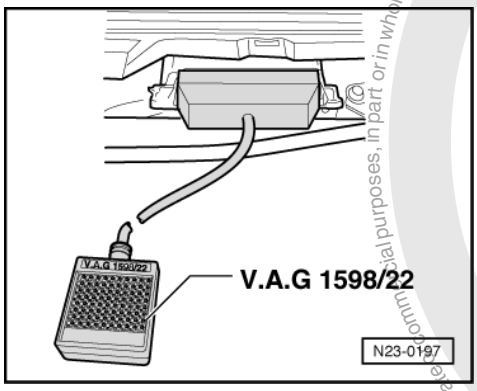

- Interrogate fault memory, if necessary, repair any faults and then erase fault memory => Page 6, interrogating and erasing fault memory.

If the specification is obtained:

- -> Connect test box V.A.G 1598/22 to control unit wiring harness.

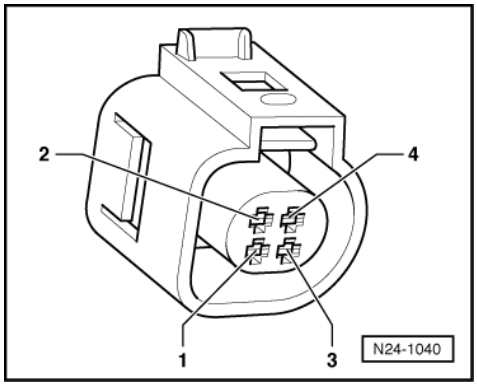

Protected by copyright. Copying for private or commercial purposes, in part or in whole, is not permitted unless authorised by Volkswagen AG. Volkswagen AG does not guarantee or accept any liability with respect to the correctness of information in this document. Copyright by Volkswagen AG.
satelettronica

- -> Check wiring between test box and 4-pin connector for open circuit using current flow diagram.
  Contact 3+ socket 54
  Contact 1+ socket 70
  Wire resistance: max. 1.5 ω
- Additionally check wires for short to one another, to vehicle earth and to battery positive.
  Specification: ∞ω

If no fault is detected in the wiring:

- Replace engine control unit
  => Page 130 .

2.6 - Checking intake manifold temperature sender

Special tools, workshop equipment, testers, measuring instruments and auxiliary items required

- Hand multimeter V.A.G 1526 or multimeter V.A.G 1715
- Fault reader V.A.G 1551 (or vehicle system tester V.A.G 1552) with cable V.A.G 1551/3
- Adapter set V.A.G 1594
- Test box V.A.G 1598/22
- Current flow diagram

Test sequence

- Connect fault reader V.A.G 1551 (V.A.G 1552) and select engine electronics control unit with the "Address word" 01. When doing this the engine must be running at idling speed.
  (Connecting fault reader and selecting engine electronics control unit => Page 2 .)

-> Indicated on display:

```
Rapid data transfer      HELP
Select function XX
```

- Press keys 0 and 8 for the function "Read measured value block" and confirm entry with Q key.

-> Indicated on display:

```
Read measured value block
Input display group number XXX
```

- Press keys 0, 0 and 7 for "Display group number 7" and confirm entry with Q key.

-> Indicated on display:

```
Read measured value block 7
15.4 5C          15.9 5C      16.7 5C
```

- Check value for intake manifold temperature in display zone 3. The value must be about ambient temperature.
- In case of a fault, a constant intake manifold temperature of 136.8°C will be displayed.
- Press the ⇒key.
- Press keys 0 and 6 for the "End output" function and confirm input with the Q key.
- Switch off ignition.
- If no realistic display appears in display zone 3 or a substitute temperature of 136.8 °C is displayed, check intake manifold temperature sender and the wiring to the sender as follows:

Engine codes AGP, AQM, AYQ

Engine codes AGR, ALH, ASV
=> Page 97 .

Protected by copyright. Copyright by Volkswagen AG. Volkswagen AG does not guarantee or accept any liability with respect to the correctness of information in this document. Copyright by Volkswagen AG.
satelettronica

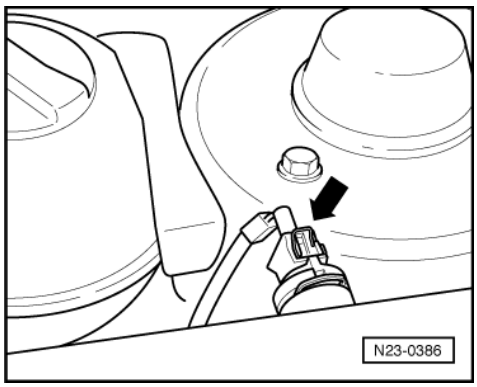

- -> Pull 2-pin connector off intake manifold temperature sender (G72) -arrow-.

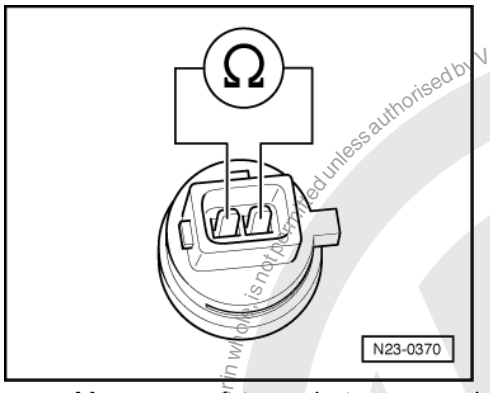

- -> Measure resistance between sender contacts.

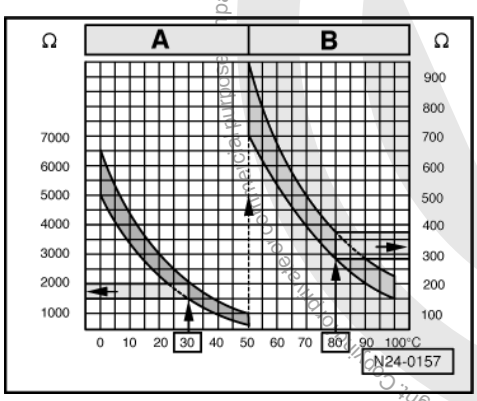

-> Specification see diagram

Scale A shows resistance values for temperature range 0...50 °C and scale B the values for temperature range 50...100 °C.

Examples:

- 30 °C corresponds to a resistance from 1500...2000 ω
- 80 °C corresponds to a resistance from 275...375 ω

If the specification is not obtained:

- Replace intake manifold temperature sender (G72).

Copyright by Volkswagen AG. Volkswagen AG does not guarantee or accept any liability with respect to the correctness of information in this document. Copyright by Volkswagen AG. Copyright: Copy or distribution of this document in whole or in part is not permitted unless authorised by Volkswagen AG.
satelettronica

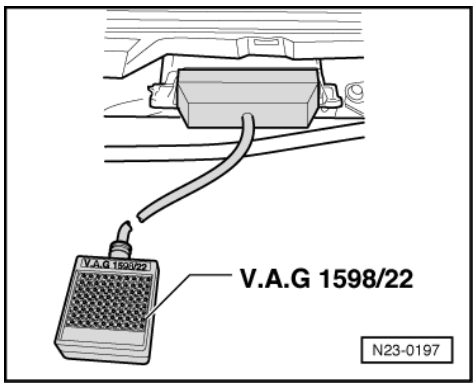

- Interrogate fault memory, if necessary, repair any faults and then erase fault memory => Page 6 , interrogating and erasing fault memory.

If the specification is obtained:

- -> Connect test box V.A.G 1598/22 to control unit wiring harness.

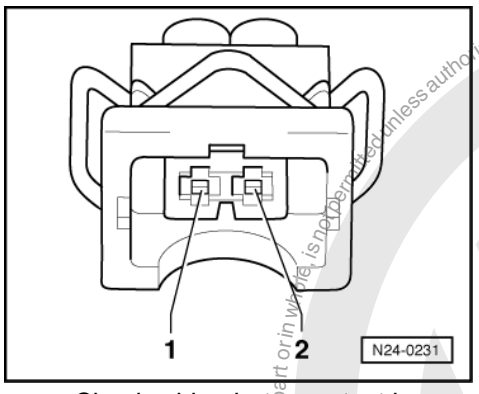

- -> Check wiring between test box and 2-pin connector for open circuit using current flow diagram.
  Contact 1+ socket 13
  Contact 2+ socket 25
  Wire resistance: max. 1.5 ω
- Additionally check wires for short to one another, to vehicle earth and to battery positive.
  Specification: ∞ω

If no fault is detected in the wiring:

- Replace engine control unit
  => Page 130 .

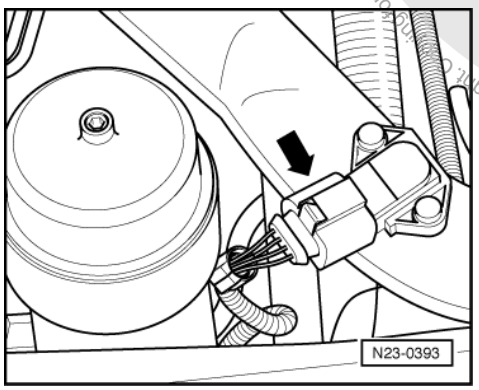

Engine codes AGR, ALH, ASV

- -> Pull 4-pin connector from intake manifold temperature sender (G72) with intake manifold pressure sender (G71) -arrow-.

Protected by copyright. Copying for private or commercial purposes, in part or in whole, is not permitted unless authorised by Volkswagen AG. Volkswagen AG does not guarantee or accept any liability with respect to the correctness of information in this document. Copyright by Volkswagen AG.
satelettronica

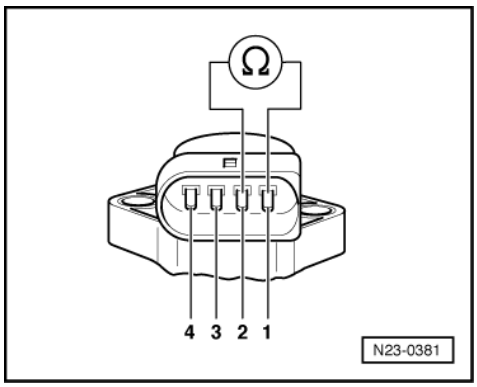

- Measure resistance between sender contacts 1 and 2.

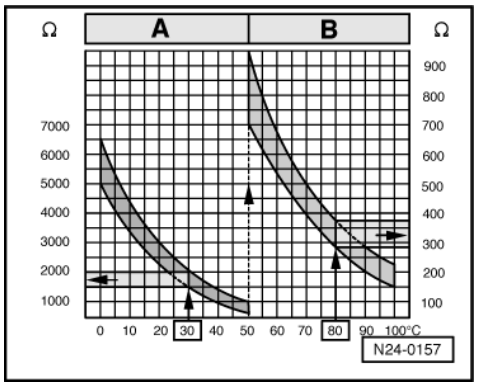

-> Specification see diagram

Scale A shows resistance values for temperature range 0...50 °C and scale B the values for temperature range 50...100 °C.

Examples:

- 30 °C corresponds to a resistance from 1500...2000 ω
- 80 °C corresponds to a resistance from 275...375 ω

If the specification is not obtained:

- Replace intake manifold temperature sender (G72) with intake manifold pressure sender (G71).
- Interrogate fault memory, if necessary, repair any faults and then erase fault memory => Page 6 , interrogating and erasing fault memory.

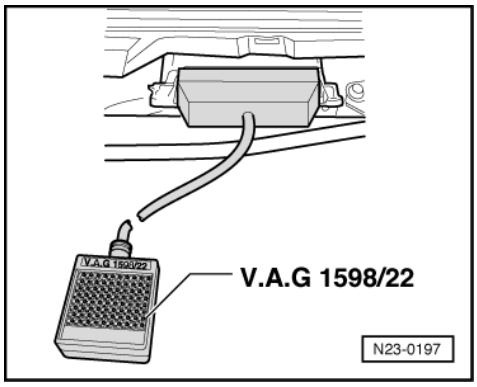

If the specification is obtained:

- -> Connect test box V.A.G 1598/22 to control unit wiring harness.

Protected by copyright. Copying for private or commercial purposes, in part or in whole, is not permitted unless authorised by Volkswagen AG. Volkswagen AG does not guarantee or accept any liability with respect to the correctness of information in this document. Copyright by Volkswagen AG.
satelettronica

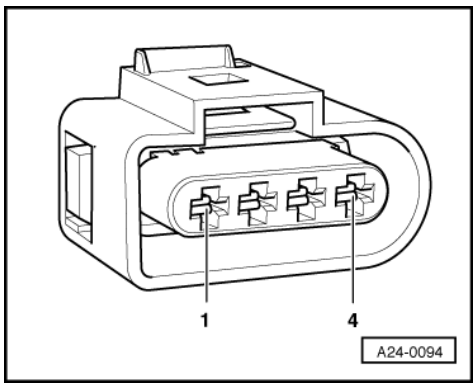

- -> Check wiring between test box and 4-pin connector for open circuit according to current flow diagram.
  Contact 1+ socket 25
  Contact 2+ socket 13
  Wire resistance: max. 1.5 ω
- Additionally check wires for short to one another, to vehicle earth and to battery positive.
  Specification: ∞ω

If no fault is detected in the wiring:

- Replace engine control unit
  => Page 130 .

2.7 - Checking fuel temperature sender

Special tools, workshop equipment, testers, measuring instruments and auxiliary items required

- Hand multimeter V.A.G 1526 or multimeter V.A.G 1715
- Fault reader V.A.G 1551 (or vehicle system tester V.A.G 1552) with cable V.A.G 1551/3
- Adapter set V.A.G 1594
- Test box V.A.G 1598/22
- Current flow diagram

Test sequence

- Connect fault reader V.A.G 1551 (V.A.G 1552) and select engine electronics control unit with the "Address word" 01. When doing this the engine must be running at idling speed.
  (Connecting fault reader and selecting engine electronics control unit => Page 2 .)

-> Indicated on display:

```
Rapid data transfer      HELP
Select function XX
```

- Press keys 0 and 8 for the function "Read measured value block" and confirm entry with Q key.

-> Indicated on display:

```
Read measured value block
Input display group number XXX
```

- Press keys 0, 0 and 7 for "Display group number 7" and confirm entry with Q key.

-> Indicated on display:

```
Read measured value block 7
15.4 5C          15.9 5C      16.7 5C
```

- Check value for fuel temperature in display zone 1. The temperature must be about ambient temperature.
- In case of a fault, a constant temperature of - 5.4 °C will be displayed.
- Press the ⇒key.

Protected by copyright. Copyright by Volkswagen AG.
Volkswagen AG does not guarantee or accept any liability with respect to the correctness of information in this document. Copyright by Volkswagen AG.
satelettronica

- Press keys 0 and 6 for the "End output" function and confirm input with the Q key.

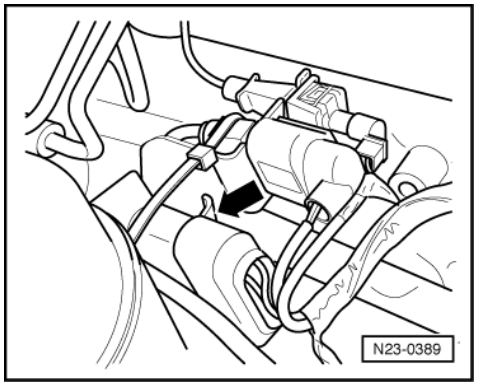

- Switch off ignition.
- If no realistic display appears in display zone 1 or a substitute temperature of -5.4 °C is displayed, check fuel temperature sender and wiring to the sender as follows:
- -> Disconnect 10-pin connector for fuel temperature sender (connection to injection pump metering control).

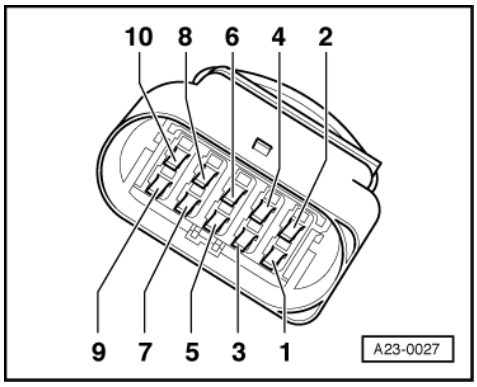

- Measure resistance between sender contacts 4 and 7.

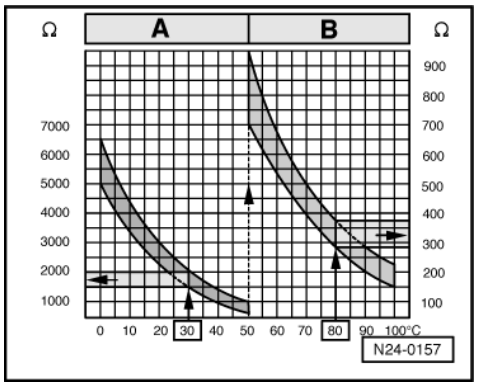

-> Specification see diagram

Scale A shows resistance values for temperature range 0...50 °C and scale B the values for temperature range 50...100 °C.

Examples:

- 30 °C corresponds to a resistance from 1500...2000 ω
- 80 °C corresponds to a resistance from 275...375 ω

If the specification is not obtained:

- Renew injection pump => Page 76 , Removing and installing injection pump.

Protected by copyright. Copying for private or commercial purposes, partly or in whole, is not permitted unless authorised by Volkswagen AG. Volkswagen AG does not guarantee or accept any liability with respect to the correctness of information in this document. Copyright by Volkswagen AG.
satelettronica

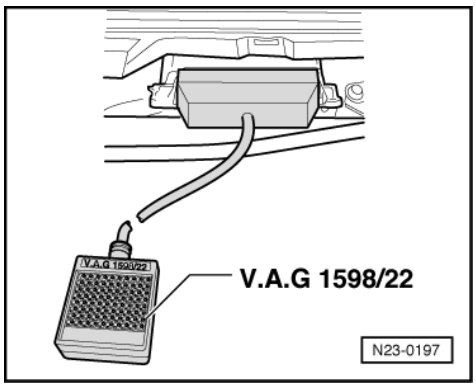

- Interrogate fault memory, if necessary, repair any faults and then erase fault memory => Page 6 , interrogating and erasing fault memory.

If the specification is obtained:

- -> Connect test box V.A.G 1598/22 to control unit wiring harness.

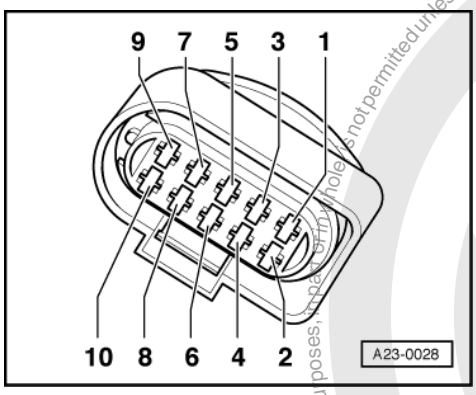

- -> Check wiring between test box and 10-pin connector for open circuit using current flow diagram.
  Contact 7+ socket 53
  Contact 4+ socket 76
  Wire resistance: max. 1.5 ω
- Additionally check wires for short to one another, to vehicle earth and to battery positive.
  Specification: ∞ω

If no fault is detected in the wiring:

- Replace engine control unit
  => Page 130 .

Protected by copyright. Copyright by Volkswagen AG. Copying for private or commercial purposes, in any form or by any means, is not permitted unless authorised by Volkswagen AG. Volkswagen AG does not guarantee or accept any liability with respect to the correctness of information in this document.
satelettronica

2.8 - Checking modulating piston movement sender and quantity adjuster

Function

The quantity adjuster is an electromagnetic swivelling positioner which is controlled by the control unit via a directed duty cycle (on-off ratio). The eccentric shaft on the quantity adjuster moves the modulating piston on the high pressure piston and thereby regulates the quantity of fuel injected.

The modulating piston movement sender informs the control unit of the position of quantity adjuster -N146 and therefore stipulates the amount injected.

Special tools, workshop equipment, testers, measuring instruments and auxiliary items required

- Hand multimeter V.A.G 1526 or multimeter V.A.G 1715
- Fault reader V.A.G 1551 (or vehicle system tester V.A.G 1552) with cable V.A.G 1551/3
- Adapter set V.A.G 1594
- Test box V.A.G 1598/22

- Current flow diagram

Test sequence

- Connect fault reader V.A.G 1551 (V.A.G 1552) and select engine electronics control unit with the "Address word" 01. When doing this the engine must be running at idling speed.
  (Connecting fault reader and selecting engine electronics control unit => Page 2 .)

-> Indicated on display:

```
Rapid data transfer      HELP
Select function XX
```

- Press keys 0 and 8 for the function "Read measured value block" and confirm entry with Q key.

-> Indicated on display:

```
Read measured value block
Input display group number XXX
```

- Press keys 0, 0 and 1 for "Display group number 1" and confirm entry with Q key.

-> Indicated on display:

```
Read measured value block 1
880 rpm      6.5 mg/H      1.680 V      87.3
5C
```

- Check coolant temperature in display zone 4.
  Specification: at least 85 °C

Continue with check only when coolant temperature is attained.

```
Read measured value block 1
880/min      6.5 mg/H      1,680 V      87.3 5C
```

-> Check voltage for modulating piston movement in display zone 3.

Specification:
Engine codes AGP, AQM: 1.600...2.100 V
Engine codes AGR, ALH: 1.300...2.000 V
Engine code ASV: 1.300...1.900 V
Engine code AYQ: 1.400...2.000 V

- Press the ⇒key.
- Press keys 0 and 6 for the "End output" function and confirm input with the Q key.
- Switch off ignition.
- If specification is not obtained, check modulating piston movement sender and quantity adjuster as described in following:

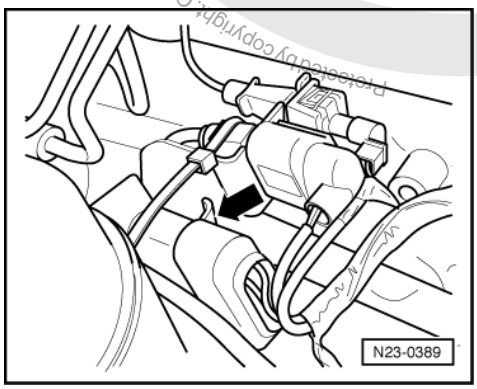

Protected by copyright. Copyright by Volkswagen AG. Copyright by Volkswagen AG, Volkswagen AG does not guarantee or accept any liability with respect to the correctness of information in this document. Copying for private or commercial purposes, in part or in whole, is not permitted unless authorised by Volkswagen AG.
satelettronica

Checking modulating piston movement sender (G149).

- -> Disconnect 10-pin connector for modulating piston movement sender (connection to injection pump metering control).

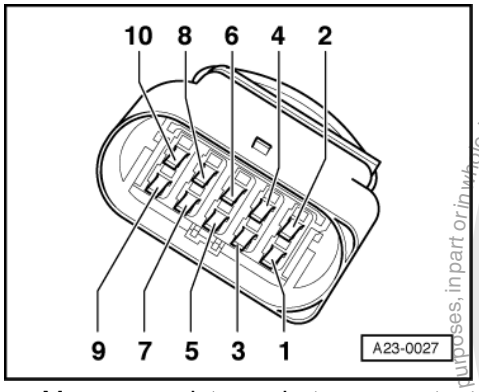

- Measure resistance between contacts 1 + 2 and 2 + 3 of connector.
  Specification: 4.9 ... 7.5 ω

If the specification is not obtained:

- Renew injection pump => Page 76 , Removing and installing injection pump.
- Interrogate fault memory, if necessary, repair any faults and then erase fault memory => Page 6 , interrogating and erasing fault memory.

If the specification is obtained:

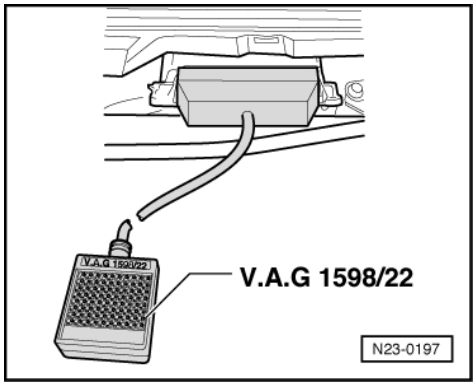

- -> Connect test box V.A.G 1598/22 to control unit wiring harness.

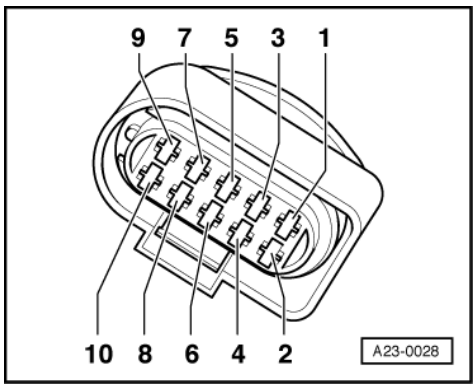

- -> Check wiring between test box and 10-pin connector for open circuit using current flow diagram.
  Contact 1+ socket 56
  Contact 2+ socket 57
  Contact 3+ socket 64
  Wire resistance: max. 1.5 ω
- Additionally check wires for short to one another, to vehicle earth and to battery positive.

Protected by copyright. Copying for private or commercial purposes, in part or in whole, is not permitted unless authorised by Volkswagen AG. Volkswagen AG does not guarantee or accept any liability with respect to the correctness of information in this document. Copyright by Volkswagen AG.
satelettronica

Specification: ∞ω

If no fault is detected in the wiring:

- Replace engine control unit
  => Page 130 .

Checking quantity adjuster (N146)

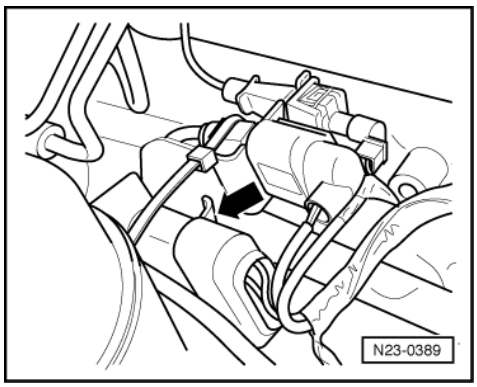

- -> Disconnect 10-pin connector (connection to injection pump metering control).

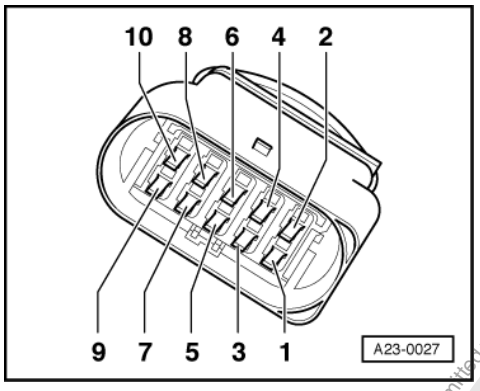

- Measure resistance between contacts 5+6 of connector.
  Specification: 0.5...2.5 ω

If the specification is not obtained:

- Renew injection pump => Page 76 , Removing and installing injection pump.
- Interrogate fault memory, if necessary, repair any faults and then erase fault memory => Page 6 , interrogating and erasing fault memory.

If the specification is obtained:

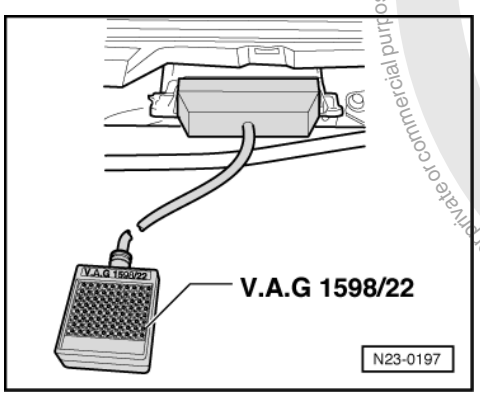

- -> Connect test box V.A.G 1598/22 to control unit wiring harness.

Protected by copyright. Copying for private or commercial purposes, in part or whole, is not permitted unless authorised by Volkswagen AG. Volkswagen AG does not guarantee or accept any liability with respect to the correctness of information in this document. Copyright by Volkswagen AG.
satelettronica

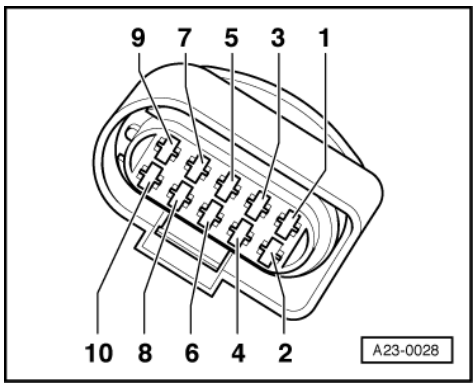

- -> Check wiring between test box and connector for open circuit according to current flow diagram.
  Contact 5+Socket 2
  Contact 5+Socket 28
  Contact 6+Socket 59
  Contact 6+Socket 66
  Contact 6+Socket 80
  Wire resistance: max. 1.5 ω
- Additionally check wires for short to one another, to vehicle earth and to battery positive.
  Specification: ∞ω

If no fault is detected in the wiring:

- Replace engine control unit
  => Page 130 .

2.9 - Checking needle lift sender

Function

The needle lift sender signal is used to determine the commencement of injection. If it fails the commencement of injection switches to open-loop control (according to engine speed and engine load). During normal operation the commencement of injection is controlled by a closed-loop function (according to engine speed, engine load and temperature).

Special tools, workshop equipment, testers, measuring instruments and auxiliary items required

- Hand multimeter V.A.G 1526 or multimeter V.A.G 1715
- Adapter set V.A.G 1594
- Test box V.A.G 1598/22

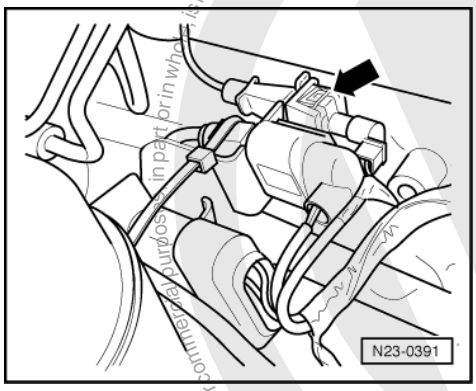

- Current flow diagram

satelettronica
Protected by copyright. Copying for private or commercial purposes, in part or in whole, is not permitted unless authorised by Volkswagen AG. Volkswagen AG does not guarantee or accept any liability with respect to the correctness of information in this document. Copyright by Volkswagen AG.

Test sequence

- Disconnect 2-pin connector for needle lift sender (G80) -arrow-.

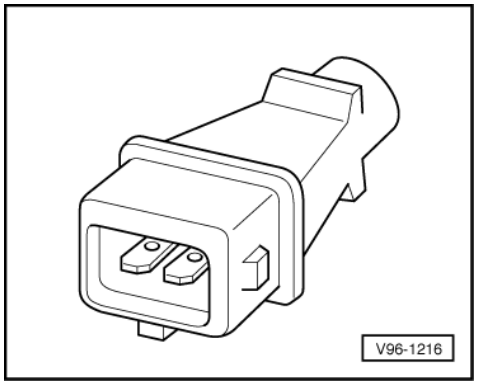

- -> Measure resistance between connector contacts.
  Specification: 80.0...120.0 ω

If the specification is not obtained:

- Replace No. 3 cylinder injector with needle lift sender (G80) => Page 64 , item 13 .
- Interrogate fault memory, if necessary, repair any faults and then erase fault memory => Page 6 , interrogating and erasing fault memory.

If the specification is obtained:

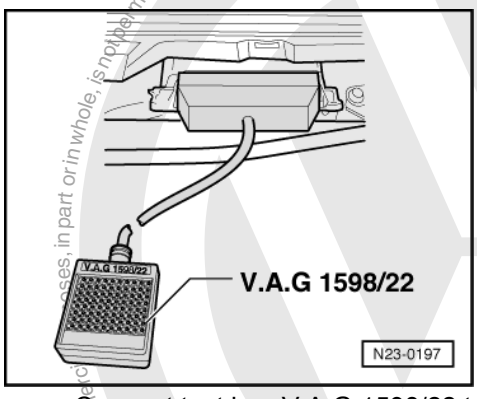

- -> Connect test box V.A.G 1598/22 to control unit wiring harness.

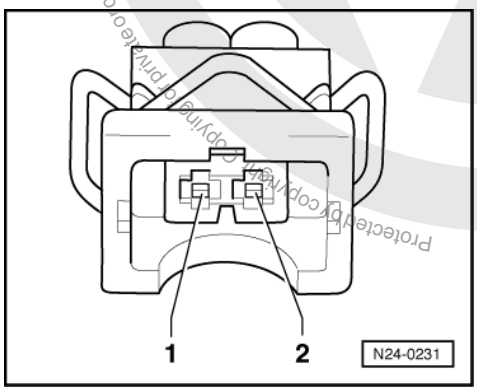

- -> Check wiring between test box and connector for open circuit according to current flow diagram.
  Contact 1+ socket 62
  Contact 2+ socket 55
  Wire resistance: max. 1.5 ω
- Additionally check wires for short to one another, to vehicle earth and to battery positive.

Protected by copyright. Copying for private or commercial purposes, in part or in whole, is not permitted unless authorised by Volkswagen AG. Volkswagen AG does not guarantee or accept any liability with respect to the correctness of information in this document. Copyright by Volkswagen AG.
satelettronica

Specification: ∞ω

If no fault is detected in the wiring:

- Replace engine control unit
  => Page 130 .

2.10 - Checking injection timing regulation range

The function of the injection timing regulation range is checked in function 04 (Basic settings). In this procedure, the injection commencement valve is pulsed so that the extreme values for advanced (early) and retarded (late) positions for the timing control can be read in measured value block 4, display zone 3.

Special tools, workshop equipment, testers, measuring instruments and auxiliary items required

- Hand multimeter V.A.G 1526 or multimeter V.A.G 1715
- Fault reader V.A.G 1551 (or vehicle system tester V.A.G 1552) with cable V.A.G 1551/3
- Adapter set V.A.G 1594
- Test box V.A.G 1598/22
- Current flow diagram

Test sequence

- Connect fault reader V.A.G 1551 (V.A.G 1552) and select engine electronics control unit with the "Address word" 01. When doing this the engine must be running at idling speed.
  (Connecting fault reader and selecting engine electronics control unit => Page 2 .)

-> Indicated on display:

```
Rapid data transfer      HELP
Select function XX
```

- Press keys 0 and 4 for the function "Introduction of basic setting" and confirm entry with Q key.

-> Indicated on display:

```
Basic setting
Input display group number XXX
```

- Press keys 0, 0 and 4 for "Display group number 4" and confirm entry with Q key.

-> Indicated on display:

```
System in basic setting      4
880 rpm     advanced     7.9 5 BTDC
66 %
```

Specification in display zone 3 and 4:
advanced 7.0...9.0° BTDC

After approx. 10 seconds the timing device is moved to the retarded position.

-> Indicated on display:

```
System in basic setting      4
880 rpm     retarded     3.9 5 BTDC
74 %
```

Specification in display zones 3 and 4:
retarded 3.0...5.0° BTDC

- Press the ⇒key.
- Press keys 0 and 6 for the "End output" function and confirm input with the Q key.
- Switch off ignition.

satelettronica

If the specifications are not obtained:

- Check commencement of injection valve as follows:

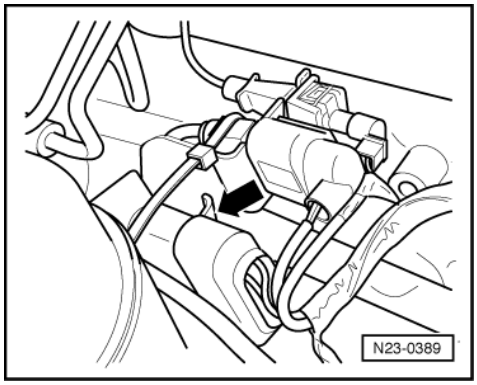

- -> Disconnect 10-pin connector for commencement of injection valve (connection to injection pump metering control).

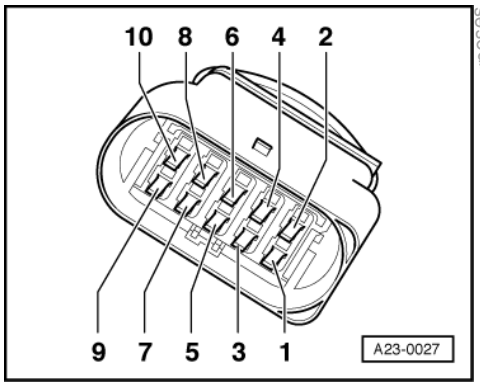

- -> Measure resistance between connector contacts 9+10.
  Specification: 12.0 ... 20.0 ω

If the specification is not obtained:

- Replace commencement of injection valve (N108)
  =>Page 64 , item 19 .
- Interrogate fault memory, if necessary, repair any faults and then erase fault memory => Page 6 , interrogating and erasing fault memory.

If the specification is obtained:

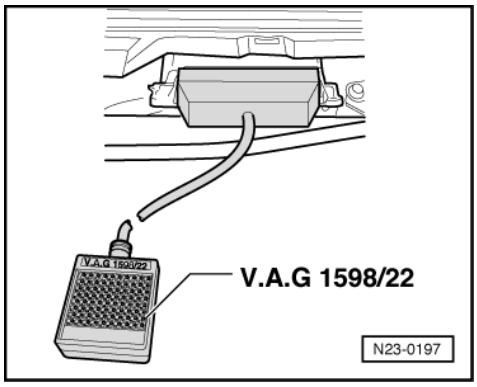

- -> Connect test box V.A.G 1598/22 to control unit wiring harness.

Protected by copyright. Copying for private or commercial purposes, in part or in whole, is not permitted unless authorised by Volkswagen AG. Volkswagen AG does not guarantee or accept any liability with respect to the correctness of information in this document. Copyright by Volkswagen AG.
satelettronica

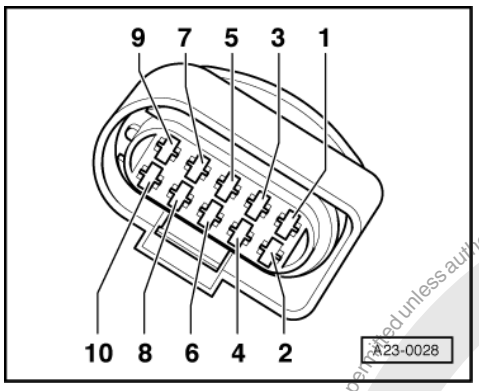

- -> Check wiring between test box and 10-pin connector for open circuit using current flow diagram.
  Contact 9 + socket 79
  Contact 10 + socket 2
  Contact 10 + socket 28
  Wire resistance: max. 1.5 ω
- Additionally check wires for short to one another, to vehicle earth and to battery positive.
  Specification: ∞ω

If no fault is detected in the wiring:

- Replace engine control unit
  => Page 130 .

2.11 - Checking air mass meter

Engine codes AGR, ALH, ASV

Function

The air mass meter signal is used by the control unit to calculate the quantity injected and to control the required exhaust gas recirculation. The smaller the signal from air mass meter the smaller the quantity of fuel injected.

Special tools, workshop equipment, testers, measuring instruments and auxiliary items required

- Hand multimeter V.A.G 1526 or multimeter V.A.G 1715
- Fault reader V.A.G 1551 (or vehicle system tester V.A.G 1552) with cable V.A.G 1551/3
- Adapter set V.A.G 1594
- Test box V.A.G 1598/22
- Current flow diagram

Check conditions

- The fuses must be OK.
- Earth connection in plenum chamber OK.
- The battery voltage must be at least 11.5 V.
- All electrical consumers, e.g. lights and rear window heating must be switched off.

Test sequence

- Connect fault reader V.A.G 1551 (V.A.G 1552) and select engine electronics control unit with the "Address word" 01. When doing this the engine must be running at idling speed.
  (Connecting fault reader and selecting engine electronics control unit => Page 2 .)

Warning! Secure fault reader to rear seat and operate from this position.

-> Indicated on display:

Copyright. Copying for private or commercial purposes, in part or in whole, is not permitted unless authorised by Volkswagen AG. Volkswagen AG does not guarantee or accept any liability with respect to the correctness of information in this document. Copyright by Volkswagen AG.
satelettronica

```
Rapid data transfer      HELP
Select function XX
```

- Press keys 0 and 8 for the function "Read measured value block" and confirm entry with Q key.

-> Indicated on display:

```
Read measured value block
Input display group number XXX
```

- Press keys 0, 1 and 0 for "Display group number 10" and confirm entry with Q key.

```
Read measured value block 10
309 mg/H 1027 mbar 1011 mbar      0,0 %
```

-> Indicated on display:
- Check mass of air drawn in in display zone 1.

Specification:
Engine code AGR: 230...420 mg/H
Engine code ALH: 200...390 mg/H
Engine code ASV: 210...420 mg/H
If the specification is not obtained:
- Check exhaust gas recirculation:

=> Repair group 26; Exhaust gas recirculation system; Checking exhaust gas recirculation Exhaust gas recirculation system Checking exhaust gas recirculation
If the specification is obtained:
- Accelerate vehicle in 2nd gear from about 1500 rpm using full throttle.

Observe the valid safety precautions when carrying out a road test => Page 47 .
- Press PRINT key on V.A.G 1551 at approx. 3000 rpm. The accelerator pedal must be fully depressed at this moment in time.

```
Read measured value block 10
830 mg/H     1027 mbar     1850 mbar     100.0
%
```

-> Specification in display zone 4:
100 % (accelerator pedal position)

If the specification is not obtained:
- Repeat test and accelerate vehicle at full throttle.

```
Read measured value block 10
830 mg/H     1027 mbar     1850 mbar     100.0
%
```

-> Specification in display zone 1:
Above 750 mg/H (mass of air drawn in).
- Press the ⇒key.
- Press keys 0 and 6 for the "End output" function and confirm input with the Q key.
- Switch off ignition.

If the specification is not obtained:
- Renew air mass meter (G70).

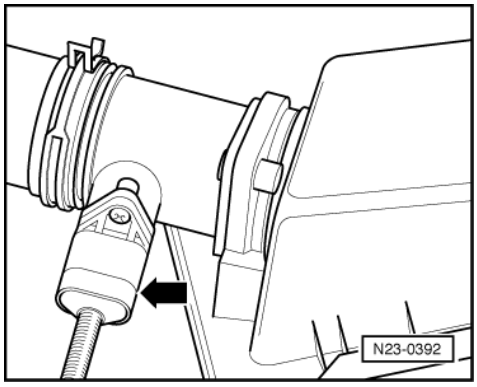

Protected by copyright. Copying for private or commercial purposes, in part or in whole, is not permitted unless authorised by Volkswagen AG. Copyright by Volkswagen AG. Volkswagen AG does not guarantee or accept any liability with respect to the correctness of information in this document.
satelettronica

- Interrogate fault memory, if necessary, repair any faults and then erase fault memory => Page 6 , interrogating and erasing fault memory.

If a constant 550 mg/H (predetermined replacement value) is displayed in display zone 1.

- -> Pull 5-pin connector off air mass meter (G70) -arrow-.
- Switch on ignition.

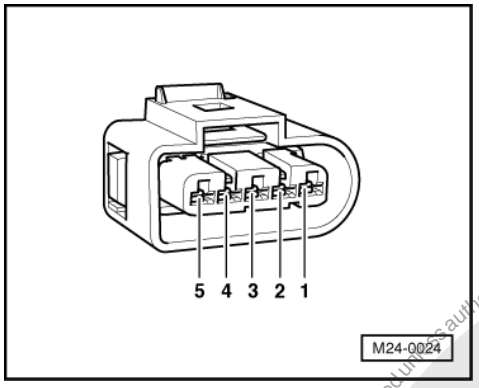

- -> Measure air mass meter voltage supply between following connector contacts:

Connector on -G70 contact:	Specification
2 + earth	About battery voltage
2 + 3	App. battery voltage
4 + earth	Approx. 5 V
4 + 3	Approx. 5 V

If the specifications are not obtained:

- Switch off ignition.

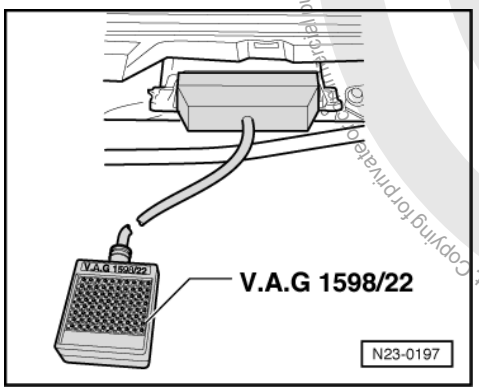

- -> Connect test box V.A.G 1598/22 to control unit wiring harness.

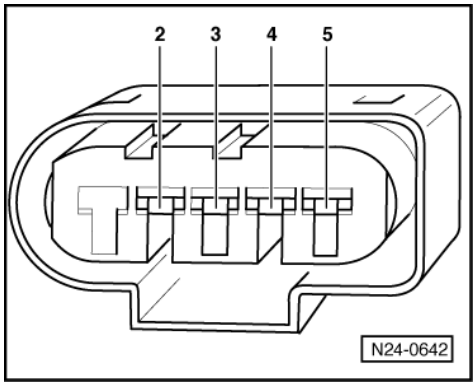

Protected by copyright. Copying for private and commercial purposes, in part or in whole, is not permitted unless authorised by Volkswagen AG. Volkswagen AG does not guarantee or accept any liability with respect to the correctness of information in this document. Copyright by Volkswagen AG.
satelettronica

- -> Check wiring between test box and 5-pin connector for open circuit using current flow diagram.
  Contact 2+ socket 2
  Contact 2+ socket 28
  Contact 3+ socket 4
  Contact 4+ socket 50
  Contact 5+ socket 52
  Wire resistance: max. 1.5 ω
- Additionally check wires for short to one another, to vehicle earth and to battery positive.
  Specification: ∞ω

If no fault is detected in the wiring:

- Replace engine control unit
  => Page 130 .

2.12 - Checking intake manifold flap change-over

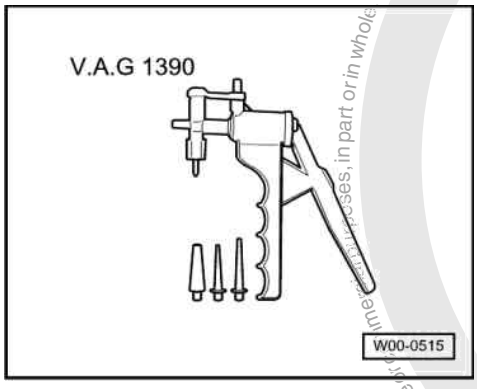

Special tools, workshop equipment, testers, measuring instruments and auxiliary items required

- V.A.G 1390 Hand vacuum pump

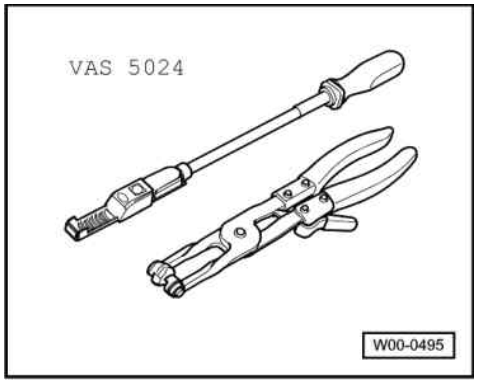

- VAS 5024 Assembly tool for spring-type clips

Checking function (Engine codes AGP, AQM)

Checking function (Engine codes AGR, ALH, ASV) => Page 113 .

At low engine speeds, the vacuum in the intake manifold is not sufficient to ensure correct function of the exhaust gas recirculation system. Therefore, to increase vacuum, the intake manifold flap remains closed up to 2700 rpm after the engine is started.

- Remove connecting hose between air cleaner and air intake connecting piece at air intake connecting piece.
- Start engine and run at idling speed.
- Observe the position of the intake manifold flap (second mechanic required).
  The intake manifold flap must close

Protected by copyright. Copying for private or commercial purposes, in part or in whole, is not permitted unless authorised by Volkswagen AG. Volkswagen AG does not guarantee or accept any liability with respect to the correctness of information in this document. Copyright by Volkswagen AG.
satelettronica

about 3 seconds after the engine starts.
- Switch off ignition.
  The intake manifold flap must open after the ignition is switched off.

If the flap does not operate as described:

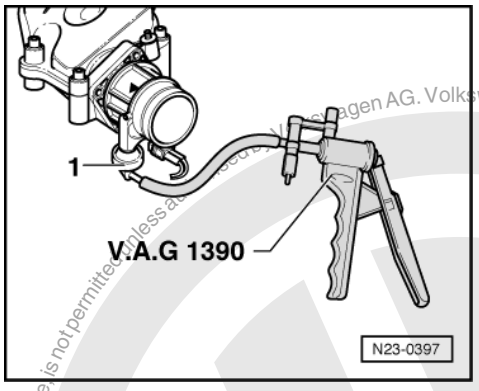

- => Connect hand vacuum pump V.A.G 1390 to vacuum unit of intake manifold flap -1-.
- Start engine and run at idling speed.
- Operate hand vacuum pump.
  The intake manifold flap must close all the way to stop and remain closed.

If the specification is not obtained:

- Check intake manifold flap change-over mechanics for freedom of movement by manually operating the intake manifold flap.
- Check vacuum pipes for correct connection.

If a fault is found in the mechanical components:

- Renew air intake connecting piece together with intake manifold flap change-over valve (N239) => Page 75 , Removing and installing air intake connecting piece.

If no fault is found in the mechanical components:

- Check intake manifold flap change-over valve =>Page 114 .

Checking function (Engine codes AGR, ALH, ASV)

The intake manifold flap closes for about 3 seconds when the engine is shut off and then opens again in order to reduce the stop jolt.

- Remove connecting hose between charge air cooler and air intake connecting piece at air intake connecting piece.
- Start engine and run at idling speed.
- Switch off ignition.
- Observe position of intake manifold flap (2nd person required).
  The intake manifold flap must close after the ignition is switched off and open again after about 3 seconds.

If change-over does not occur, the following checks must be carried out.

- Check intake manifold flap change-over mechanics for freedom of movement. To do this operate rods by hand.
- Check function of vacuum positioning element with hand vacuum pump V.A.G 1390.
- Check vacuum pipes for correct connection.

If no fault is found in the mechanical components:

Copyright by Volkswagen AG. Volkswagen AG does not guarantee or accept any liability with respect to the correctness of information in this document. Copyright by Volkswagen AG. Protected by copyright. Copying for private or commercial purposes, in part or in whole, is not permitted unless authorised by Volkswagen AG.
satelettronica

- Check intake manifold flap change-over valve =>Page 114 .

2.13 - Checking intake manifold flap change-over valve

Special tools, workshop equipment, testers, measuring instruments and auxiliary items required

- Hand multimeter V.A.G 1526 or multimeter V.A.G 1715
- Adapter set V.A.G 1594
- Test box V.A.G 1598/22
- Current flow diagram

Check conditions

- The fuses must be OK.
- Earth connection in plenum chamber OK.
- The battery voltage must be at least 11.5 V.
- All electrical consumers, e.g. lights and rear window heating must be switched off.

Test procedure (Engine codes AGP, AQM)

Test procedure (engine codes AGR, ALH, ASV)
=> Page 116 .

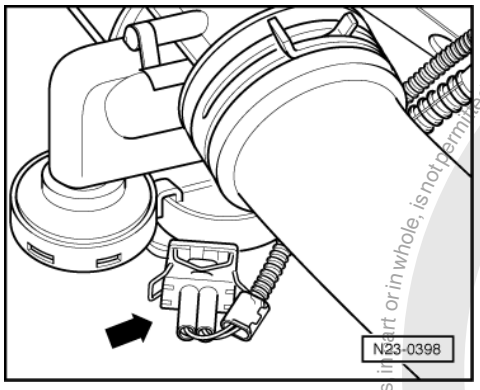

- Pull 2-pin connector off intake manifold flap change-over valve (N239) -arrow-.

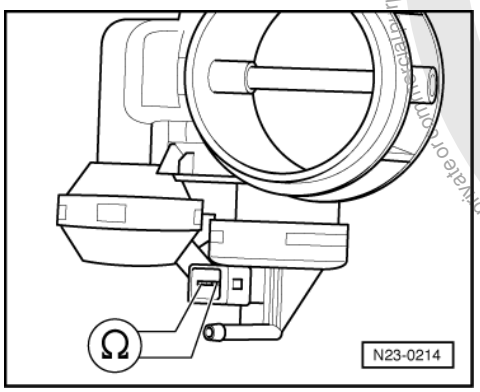

- -> Measure resistance between change-over valve contacts.
  Specification: 25.0 ... 45.0 ω

If the specification is not obtained:

- Renew air intake connecting piece together with intake manifold flap change-over valve (N239)

Protected by copyright. Copying for private or commercial purposes, in part or in whole, is not permitted unless authorised by Volkswagen AG. Volkswagen AG does not guarantee or accept any liability with respect to the correctness of information in this document. Copyright by Volkswagen AG.
satelettronica

=> Page 75 , Removing and installing air intake connecting piece.

- Interrogate fault memory, if necessary, repair any faults and then erase fault memory => Page 6 , interrogating and erasing fault memory.

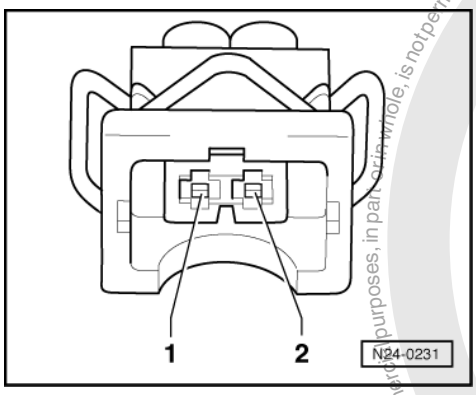

If the specification is obtained:

- -> Set multimeter to measure voltage and connect to contacts 1 and 2 of disconnected connector from intake manifold flap change-over valve.
- Start engine and run at idling speed.
  Specification: at least 4.5 V
- Switch off ignition. Value for voltage must drop to
  0.0 V after about 3 seconds.

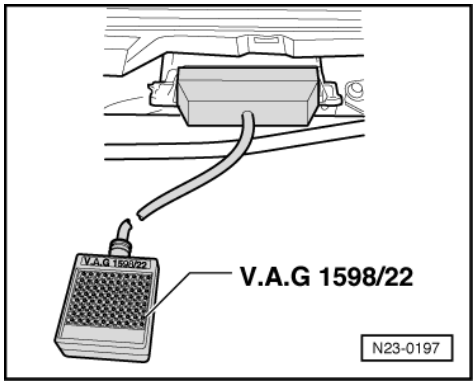

If the voltage values do not change as described:

- -> Connect test box V.A.G 1598/22 to control unit wiring harness.

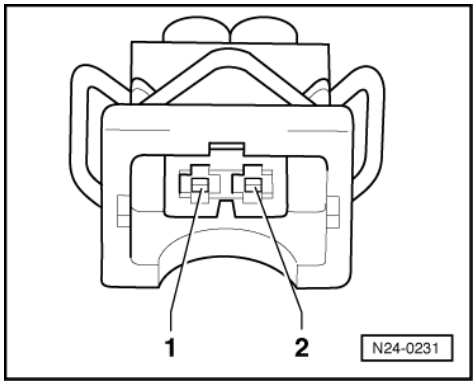

- -> Check wiring between test box and connector for open circuit using current flow diagram.
  Contact 1+socket 2
  Contact 1+socket 28
  Contact 2+socket 15
  Wire resistance: max. 1.5 ω

Protected by copyright. Copying for private or commercial purposes, in part or in whole, is not permitted unless authorised by Volkswagen AG. Volkswagen AG does not guarantee or accept any liability with respect to the correctness of information in this document. Copyright by Volkswagen AG.
satelettronica

- Additionally check wires for short to one another, to vehicle earth and to battery positive.
  Specification: ∞ω

If no fault is detected in the wiring:

- Replace engine control unit
  => Page 130 .

Test procedure (engine codes AGR, ALH, ASV)

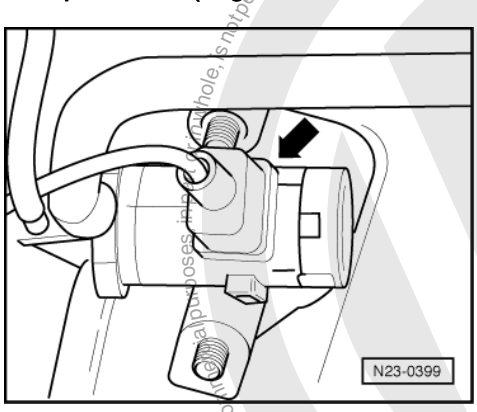

- Pull 2-pin connector off intake manifold flap change-over valve (N239) -arrow-.

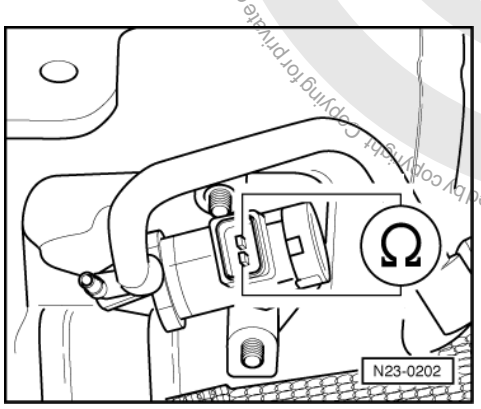

- -> Measure resistance between change-over valve contacts.
  Specification: 25.0 ... 45.0 ω

If the specification is not obtained:

- Renew intake manifold flap change-over valve (N239)=> Page 71 , item 12 .
- Interrogate fault memory, if necessary, repair any faults and then erase fault memory => Page 6 , interrogating and erasing fault memory.

If the specification is obtained:

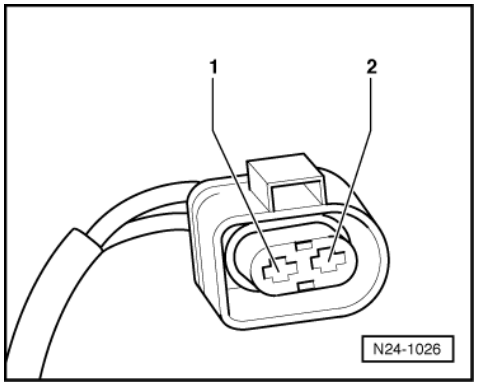

Protected by copyright. Copying for private or commercial purposes, in part or whole, is not permitted unless authorised by Volkswagen AG. Volkswagen AG does not guarantee or accept any liability with respect to the correctness of information in this document. Copyright by Volkswagen AG.
satelettronica

- -> Set multimeter to measure voltage and connect to contacts 1 and 2 of disconnected connector from intake manifold flap change-over valve.
- Start engine and run at idling speed.
  Specification: at least 4.5 V
- Switch off ignition. Voltage must rise to battery voltage and fall to 0.0 V after about 3 seconds.

If the voltage values do not change as described:

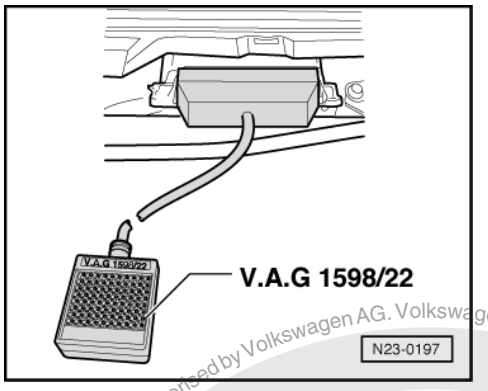

- -> Connect test box V.A.G 1598/22 to control unit wiring harness.

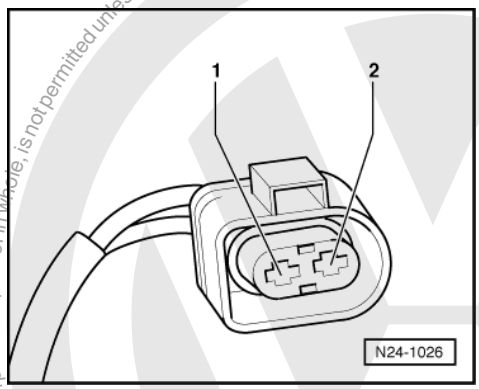

- -> Check wiring between test box and 2-pin connector for open circuit using current flow diagram.
  Contact 1+socket 2
  Contact 1+socket 28
  Contact 2+socket 3
  Wire resistance: max. 1.5 ω
- Additionally check wires for short to one another, to vehicle earth and to battery positive.
  Specification: ∞ω

If no fault is detected in the wiring:

- Replace engine control unit
  => Page 130.

2.14 - Checking intake manifold flap motor

Engine code AYQ

Special tools, workshop equipment, testers, measuring instruments and auxiliary items required

- Fault reader V.A.G 1551 or vehicle system tester V.A.G 1552 with cable V.A.G 1551/3
- Test box V.A.G 1598/31
- Hand multimeter V.A.G 1526 or multimeter V.A.G 1715
- Adapter set V.A.G 1594

Protected by copyright. Copyright by Volkswagen AG. Copying for private or commercial purposes, in part or in whole, is not permitted unless authorised by Volkswagen AG. Volkswagen AG does not guarantee or accept any liability with respect to the correctness of information in this document.
satelettronica

- Current flow diagram

Test sequence

- Connect fault reader V.A.G 1551 (V.A.G 1552) and select engine electronics control unit with the "Address word" 01. When doing this the engine must be running at idling speed.
  (Connecting fault reader and selecting engine electronics control unit => Page 2 .)

-> Indicated on display:

```
Rapid data transfer      HELP
Select function XX
```

- Press keys 0 and 3 for the function "Final control diagnosis".

-> Indicated on display:

```
Rapid data transfer      Q
03 Final control diagnosis
```

- Confirm input with Q key.

-> Indicated on display:

```
Final control diagnosis
Intake manifold flap motor V157
```

Activating the intake manifold flap motor changes the combustion noise (the positioning motor opens and closes the intake manifold flap).

If no changes to combustion noises can be heard:

- Press C key.

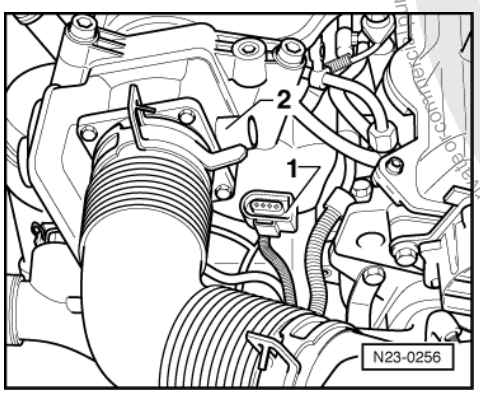

- Press keys 0 and 6 for the "End data transfer" function and confirm input with the Q key.
- Switch off ignition.

Test sequence

- -> Pull connector -1- off intake manifold flap motor -2-.
- Switch on ignition.

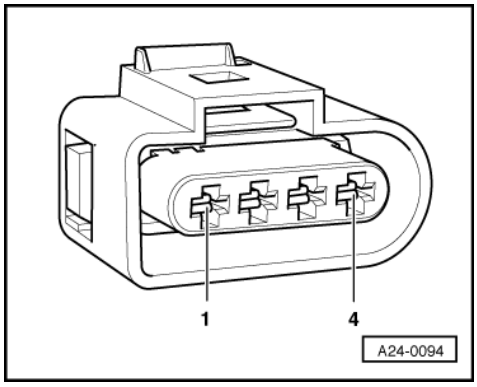

Protected by copyright. Copying for private or commercial purposes, in part or in whole, is not permitted unless authorised by Volkswagen AG. Volkswagen AG does not guarantee or accept any liability with respect to the correctness of information in this document. Copyright by Volkswagen AG.
satelettronica

- -> Measure supply voltage at intake manifold flap motor contact 4 and at engine earth, then at contact 4 and 1 of connector.
  Specification: approx. battery voltage

If the specification is not obtained:

- Switch off ignition.

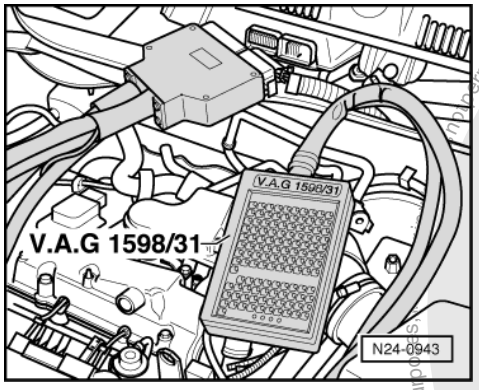

- -> Connect test box V.A.G 1598/31 to control unit wiring harness.
- Check wiring between test box and connector for open circuit using current flow diagram.
  Contact 2+ socket 3
  Contact 3+ socket 49
  Wire resistance: max. 1.5ω
- Additionally check wires for short to one another, to vehicle earth and to battery positive.
  Specification: ∞ω

If no fault is detected in the wiring:

- Renew Diesel direct injection system control unit (J248) => Page 130 .

3 - Checking additional signals

3.1 - Checking additional signals

3.2 - Checking speed signal

Special tools, workshop equipment, testers, measuring instruments and auxiliary items required

- Hand multimeter V.A.G 1526 or multimeter V.A.G 1715
- Fault reader V.A.G 1551 (or vehicle system tester V.A.G 1552) with cable V.A.G 1551/3
- Adapter set V.A.G 1594
- Test box V.A.G 1598/22
- Current flow diagram

Check conditions

- The fuses must be OK.
- The battery voltage must be at least 11.5 V.
- All electrical consumers, e.g. lights and rear window heating must be switched off.
- Speedometer must be OK., checking speedometer:

=> Electrical system; Repair group 90

Protected by copyright. Copying for private or commercial purposes, in any form or medium is not permitted unless authorised by Volkswagen AG. Volkswagen AG does not guarantee or accept any liability with respect to the correctness of information in this document. Copyright by Volkswagen AG.
satelettronica

Test sequence

Note:

To check the speed signal the vehicle must be driven. To do this a second person is necessary.

Warning! Secure fault reader to rear seat and operate from this position.

- Connect fault reader V.A.G 1551 (V.A.G 1552) and select engine electronics control unit with the "Address word" 01. When doing this the engine must be running at idling speed.
  (Connecting fault reader and selecting engine electronics control unit => Page 2 .)

-> Indicated on display:

```
Rapid data transfer      HELP
Select function XX
```

- Press keys 0 and 8 for the function "Read measured value block" and confirm entry with Q key.

-> Indicated on display:

```
Read measured value block
Input display group number XXX
```

- Press keys 0, 0 and 6 for "Display group number 6" and confirm entry with Q key.
- Carry out test drive with a 2nd person to observe display.

Observe the valid safety precautions when carrying out a road test => Page 47 .

```
Read measured value block 6
     0 km/h     0     0     0     000000
255
```

-> Observe figure displayed in display zone 1:
Specification: approximately road speed

- Press ⇒key.
- Press keys 0 and 6 for the function "End output" and confirm entry with the Q key.
- Switch off ignition.

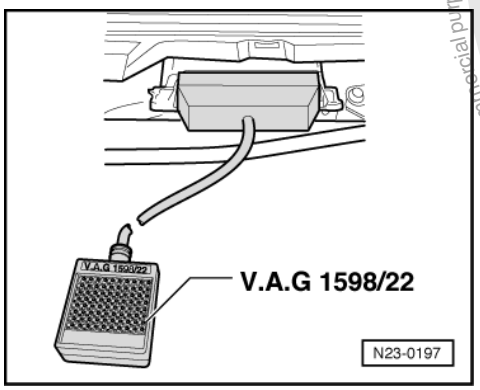

If no speed is indicated:

- -> Connect test box V.A.G 1598/22 to control unit wiring harness.
- Connect multimeter to measure voltage between test box sockets 1 + 51 as well as 27 + 51.
- Switch on ignition.
- Lift vehicle at front left.
- Rotate front wheel and observe voltage display.
  Specification: between 0 and at least 4 Volt fluctuating

Protected by copyright. Copying for private or commercial purposes, in part or in whole, is not permitted unless authorised by Volkswagen AG. Volkswagen AG does not guarantee or accept any liability with respect to the correctness of information in this document. Copyright by Volkswagen AG.
satelettronica

Note:

If necessary, hold the front right wheel to prevent it from turning.

If the display does not fluctuate:

- Check wiring for open or short circuit between text box socket 51 and dash panel insert using current flow diagram.
  Wire resistance: max. 1.5 ω

=> Current flow diagrams, Electrical fault finding and Fitting locations

3.3 - Checking signals from brake light switch and brake pedal switch

Function

Because the injection system operates with an accelerator pedal sender (potentiometer) which may be defective, the engine is regulated for reasons of safety when the brakes are operated. To do this the control unit requires signals from the brake light switch and also the brake pedal switch. This means that if the brakes are operated when the accelerator pedal is held at a constant position the engine is immediately reduced to idling speed. Incorrectly adjusted switches may lead to unrequired regulating action

Special tools, workshop equipment, testers, measuring instruments and auxiliary items required

- Hand multimeter V.A.G 1526 or multimeter V.A.G 1715
- Fault reader V.A.G 1551 (or vehicle system tester V.A.G 1552) with cable V.A.G 1551/3
- Adapter set V.A.G 1594
- Test box V.A.G 1598/22
- Current flow diagram

Check conditions

- The fuses must be OK.
- The battery voltage must be at least 11.5 V.
- All electrical consumers, e.g. lights and rear window heating must be switched off.

Test sequence

- Connect the fault reader V.A.G 1551 (V.A.G 1552) and with ignition switched on select engine electronics control unit with the "Address word" 01.
  (Connecting fault reader and selecting engine electronics control unit => Page 2 .)

-> Indicated on display:

```
Rapid data transfer     HELP
Select function XX
```

- Press keys 0 and 8 for the function "Read measured value block" and confirm entry with Q key.

-> Indicated on display:

```
Read measured value block
Input display group number XXX
```

- Press keys 0, 0 and 6 for "Display group number 6" and confirm entry with Q key.

```
Read measured value block 6
     0 km/h     0     0     0     000000
255
```

-> Observe display in display zone 2.
Specification: 0 0 0
- Centre display = Brake pedal switch
- Right-hand display = Brake light switch

satelettronica

```
Read measured value block 6
     0 km/h     0     1     1     000000
255
```

-> Operate brake pedal slowly. Both positions must change from 0 to 1 simultaneously.
Specification: 0 1 1

- Release brake pedal slowly into rest position again.

-> Both positions must change from 1 back to 0.

```
Read measured value block 6
     0 km/h     0     0     0     000000
255
```

- Press the ⇒key.
- Press keys 0 and 6 for the "End output" function and confirm input with the Q key.
- Switch off ignition.
- If no change takes place: adjust brake pedal switch switch point by turning the switch or adjust brake light switch point by moving the plunger.
- If one or both of the displays do not change from 0 to 1, check switches or wiring connections to switches as described in the following:
- Remove cover in footwell (driver's side).

Checking brake pedal switch (F47)

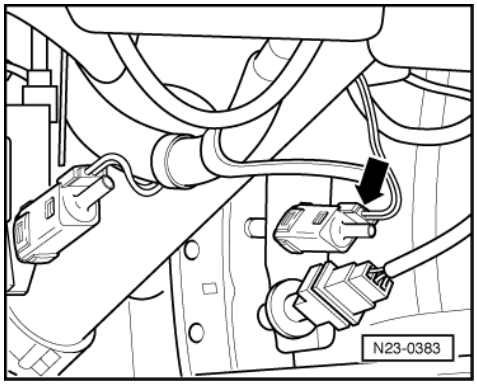

- Pull 2-pin connector off brake pedal switch -arrow-.

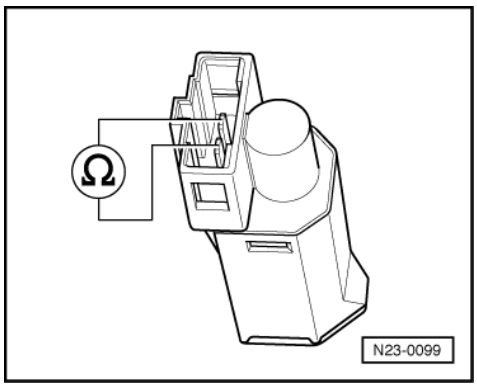

- -> Measure resistance between switch contacts.
  Specification
  Brake pedal not depressed: max. 1.5ω
  Brake pedal depressed: ∞ω(open circuit)

If the specification is not obtained:

- Replace the brake pedal switch(F47).
- Adjust switch point of brake pedal switch by turning switch.
- Interrogate fault memory, if necessary, repair any faults and then erase fault memory => Page 6 , interrogating and erasing fault memory.

Protected by copyright. Copying for private or commercial purposes, in part or in whole, is not permitted unless authorised by Volkswagen AG. Volkswagen AG does not guarantee or accept any liability with respect to the correctness of information in this document. Copyright by Volkswagen AG.
satelettronica

If the specification is obtained:

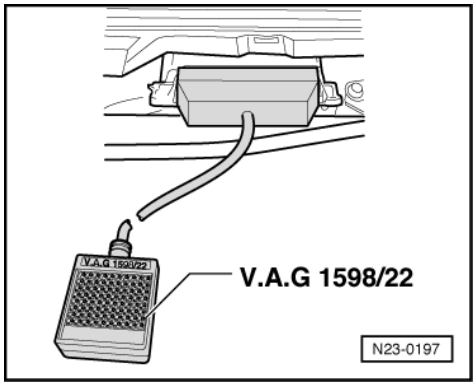

- -> Connect test box V.A.G 1598/22 to control unit wiring harness.

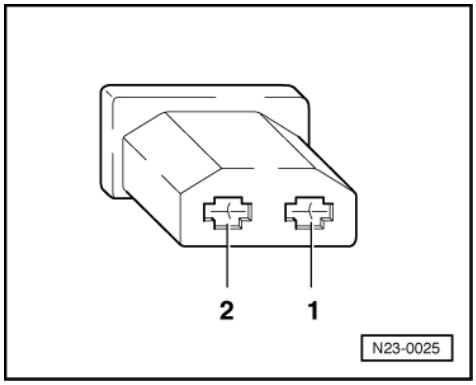

- -> Check wiring between test box and 2-pin connector for open circuit using current flow diagram.
  Contact 1+socket 2
  Contact 1+socket 28
  Contact 2+socket 9
  Wire resistance: max. 1.5 ω
- Additionally check wires for short to one another, to vehicle earth and to battery positive.
  Specification: ∞ω

If no fault is detected in the wiring:

- Replace engine control unit
  => Page 130 .

Checking brake light switch (F)

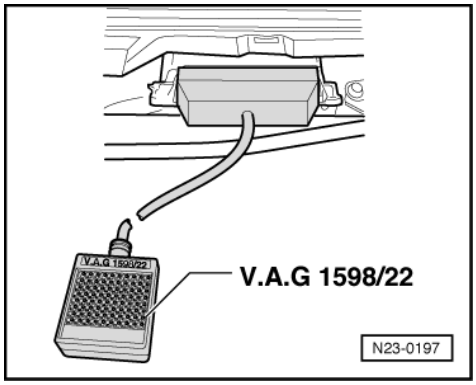

- -> Connect test box V.A.G 1598/22 to control unit wiring harness.
- Connect multimeter to measure voltage between test box sockets 1+20.
- Observe voltage display.
  Specification:
  Brake pedal not depressed: 0.0 Volt

Protected by copyright. Copying for private or commercial purposes, in part or in whole, is not permitted unless authorised by Volkswagen AG. Volkswagen AG does not guarantee or accept any liability with respect to the correctness of information in this document. Copyright by Volkswagen AG.
satelitronica

Brake pedal depressed: about battery voltage

No voltage is displayed:

- Check whether brake light functions.

Brake light OK:

- Check wiring to brake light switch for open or short circuit using current flow diagram.

=> Current flow diagrams, Electrical fault finding and Fitting locations

Brake light not OK:

- Replace brake light switch (F).
- Adjust switch point of brake pedal switch by moving plunger.

3.4 - Checking signal from clutch pedal switch

Function

The clutch pedal switch (F36) informs the control unit whether the clutch is engaged or disengaged. This prevents the engine from jolting when clutch is being disengaged or engaged.

Special tools, workshop equipment, testers, measuring instruments and auxiliary items required

- Hand multimeter V.A.G 1526 or multimeter V.A.G 1715
- Fault reader V.A.G 1551 (or vehicle system tester V.A.G 1552) with cable V.A.G 1551/3
- Adapter set V.A.G 1594
- Test box V.A.G 1598/22
- Current flow diagram

Check conditions

- The fuses must be OK.
- The battery voltage must be at least 11.5 V.
- All electrical consumers, e.g. lights and rear window heating must be switched off.

Test sequence

- Connect the fault reader V.A.G 1551 (V.A.G 1552) and with ignition switched on select engine electronics control unit with the "Address word" 01.
  (Connecting fault reader and selecting engine electronics control unit => Page 2 .)

-> Indicated on display:

```
Rapid data transfer     HELP
Select function XX
```

- Press keys 0 and 8 for the function "Read measured value block" and confirm entry with Q key.

-> Indicated on display:

```
Read measured value block
Input display group number XXX
```

- Press keys 0, 0 and 6 for "Display group number 6" and confirm entry with Q key.

```
Read measured value block 6
     0 km/h     0     0     0     000000
255
```

-> Observe display in display zone 2.
Specification: 0 0 0
- left-hand position = clutch pedal switch

satelettronica

```
Read measured value block 6
     0 km/h      1      0      0      000000
255
```

-> Operate clutch pedal. The left-hand position must change to 1.
- Release brake pedal slowly into rest position again.

-> Left-hand position must change from 1 back to 0.

```
Read measured value block 6
     0 km/h      0      0      0      000000
255
```

- Press the ⇒key.
- Press keys 0 and 6 for the "End output" function and confirm input with the Q key.
- Switch off ignition.
- If value does not change, adjust switch point of clutch pedal switch by turning the switch.

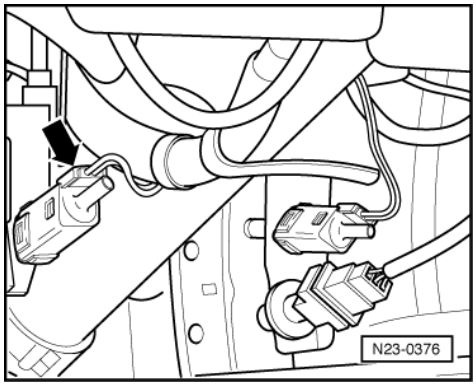

- If the display does not change from 0 to 1, check switch and wiring connections to switch as described below:
- Remove cover in footwell (driver's side).
- Pull 2-pin connector off clutch pedal switch (F36) -arrow-.

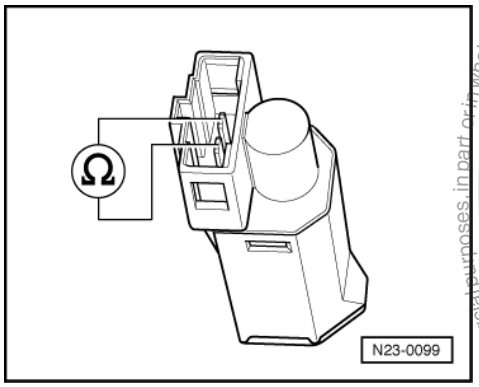

- -> Measure resistance at switch contacts.
  Specification
  Clutch not depressed: max. 1.5 ω
  Clutch depressed: ∞ω(open circuit)

If the specifications are not obtained:

- Replace clutch pedal switch (F36).
- Adjust switch point of clutch pedal switch by turning switch.
- Interrogate fault memory, if necessary, repair any faults and then erase fault memory => Page 6 , interrogating and erasing fault memory.

If the specification is obtained:

Protected by copyright. Copying for private or commercial purposes, in part or in whole, is not permitted unless authorised by Volkswagen AG. Volkswagen AG does not guarantee or accept any liability with respect to the correctness of information in this document. Copyright by Volkswagen AG.
satelettronica

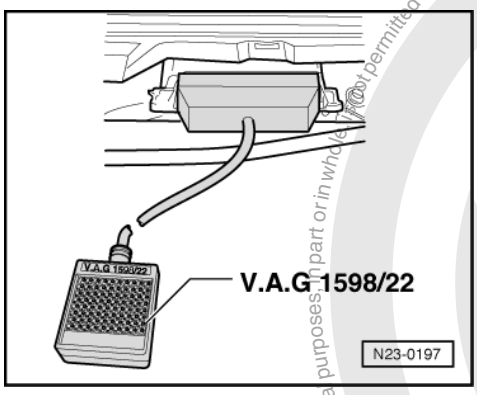

- -> Connect test box V.A.G 1598/22 to control unit wiring harness.

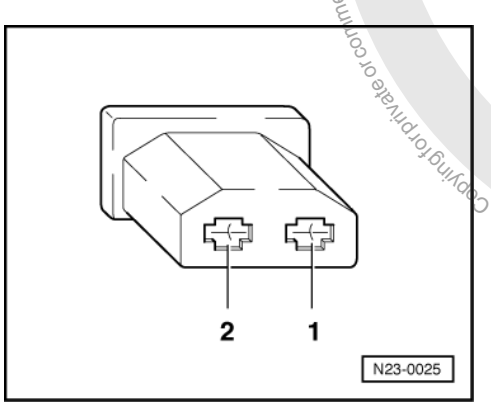

- -> Check wiring between test box and 2-connector for open circuit using current flow diagram.
  Contact 1+ socket 2
  Contact 1+ socket 28
  Contact 2+ socket 46
  Wire resistance: max. 1.5 ω
- Additionally check wires for short to one another, to vehicle earth and to battery positive.
  Specification: ∞ω

If no fault is detected in the wiring:

- Replace engine control unit
  => Page 130 .

3.5 - Checking signals from/to air conditioning system

Special tools, workshop equipment, testers, measuring instruments and auxiliary items required

- Hand multimeter V.A.G 1526 or multimeter V.A.G 1715
- Fault reader V.A.G 1551 (or vehicle system tester V.A.G 1552) with cable V.A.G 1551/3
- Adapter set V.A.G 1594
- Test box V.A.G 1598/22
- Current flow diagram

Test conditions

- Air conditioner functioning OK.
- No faults must be stored in fault memory
  => Page 6 , interrogating fault memory
- Vehicle at room temperature (warmer than + 15 °C).

Protected by copyright. Copying for private or commercial purposes, in part or in whole, is not permitted unless authorised by Volkswagen AG. Volkswagen AG does not guarantee or accept any liability with respect to the correctness of information in this document. Copyright by Volkswagen AG.
satelettronica

Checking compressor shut-off

The engine control unit receives the information that the air conditioner will be switched on shortly via the air conditioner ready signal.

Through another wiring connection, the engine control has the possibility of switching off the air conditioner compressor for various operating conditions:

- Hard acceleration from low speed
- Emergency programme (emergency running operation)
- Coolant temperatures above + 120°C
- Each start sequence for approx. 6 seconds.

Test sequence

- Switch on air conditioning system.
- Select lowest temperature and highest blower speed. The air conditioner compressor must run.

- Connect fault reader V.A.G 1551 (V.A.G 1552) and select engine electronics control unit with the "Address word" 01. When doing this the engine must be running at idling speed.
  (Connecting fault reader and selecting engine electronics control unit => Page 2 .)

-> Indicated on display:

```
Rapid data transfer     HELP
Select function XX
```

- Operate fault reader taking into account the information on the display:
- Press keys 0 and 3 for the function "Final control diagnosis".

-> Indicated on display:

```
Rapid data transfer     Q
03 Final control diagnosis
```

- Confirm input with Q key.

-> Indicated on display:

```
Final control diagnosis
Commencement of injection valve -N108
```

- Press the ⇒key.

-> Indicated on display:

```
Final control diagnosis
Exhaust gas recirculation valve -N18
```

- Press the ⇒key.

-> Indicated on display:

```
Final control diagnosis
Conditioner compressor interruption
```

Air conditioner compressor switch-off is checked.
The air conditioner compressor must stop within 5 seconds (visual check) then start about every 5 seconds and then stop.

If the conditioner compressor is not switched off:

- Proceed with final control diagnosis until completed.
- Press keys 0 and 6 for the "End output" function and confirm input with the Q key.
- Switch off ignition.

Protected by copyright. Copyright by Volkswagen AG.
Copyright by Volkswagen AG. Volkswagen AG does not guarantee or accept any liability with respect to the correctness of information in this document. Copying in part or in whole is not permitted unless authorised by Volkswagen AG.
satelettronica

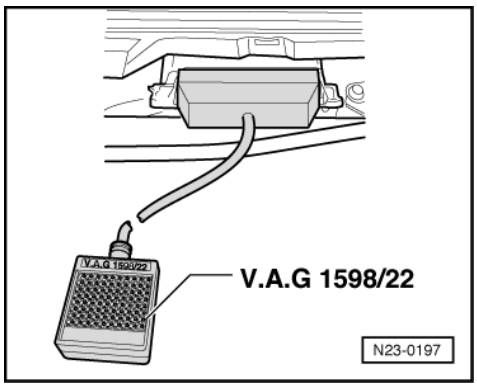

- -> Connect test box V.A.G 1598/22 to control unit wiring harness.
- Check wiring connections between test box socket 16 and air conditioning system for open or short circuit using current flow diagram.
  Wire resistance: max. 1.5 ω

=> Current flow diagrams, Electrical fault finding and Fitting locations

Checking air conditioner system signal to engine revolution adaption

The signal ensures that engine control unit keeps the idling speed constant even when the air conditioning system is operating at different loads.

Test sequence

- Connect fault reader V.A.G 1551 (V.A.G 1552) and select engine electronics control unit with the "Address word" 01. When doing this the engine must be running at idling speed.
  (Connecting fault reader and selecting engine electronics control unit => Page 2 .)

-> Indicated on display:

```
Rapid data transfer      HELP
Select function XX
```

- Press keys 0 and 8 for the function "Read measured value block" and confirm entry with Q key.

-> Indicated on display:

```
Read measured value block
Input display group number XXX
```

- Press keys 0, 0 and 2 for "Display group number 2" and confirm entry with Q key.

```
Read measured value block 2
880 rpm     0.0 %     0     1     0     87.3
5C
```

  -> Observe display in display zone 3.
  Specification: 0 1 0
  - Left-hand display = Idling speed not raised
  - Right-hand display = Air conditioning system signal off
- Switch on air conditioning system.
- Select lowest temperature and highest blower speed. The air conditioner compressor must run.

```
Read measured value block 2
900 rpm     0.0 %     1     1     1     87.3
5C
```

  -> Observe display in display zone 3.
  Specification: 1 1 1
  - Left-hand display = Idling speed raised
  - Right-hand display = Air conditioning system signal on
- Press the ⇒key.
- Press keys 0 and 6 for the "End output" function and confirm input with the Q key.
- Switch off ignition.

satelettronica

If the specifications are not obtained:

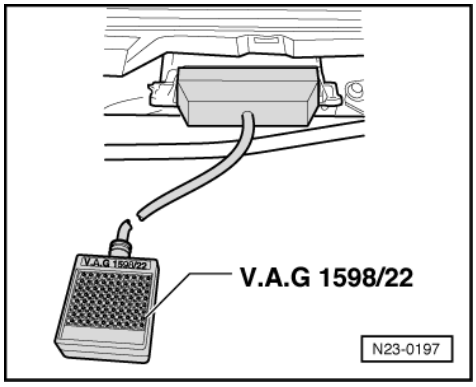

- -> Connect test box V.A.G 1598/22 to control unit wiring harness.
- Check wiring connection for open or short circuit between test box socket 48 and air conditioner using current flow diagram.
  Wire resistance: max. 1.5 ω

=> Current flow diagrams, Electrical fault finding and Fitting locations

3.6 - Checking engine speed signal

Function

The engine speed signal is output via contact 6 on engine control unit. The signal is required, amongst others, by the gearbox control unit to calculate the gear change points and for rev counter in the dash panel insert.

Special tools, workshop equipment, testers, measuring instruments and auxiliary items required

- Hand multimeter V.A.G 1526 or multimeter V.A.G 1715
- Adapter set V.A.G 1594
- Test box V.A.G 1598/22
- Current flow diagram

Test sequence

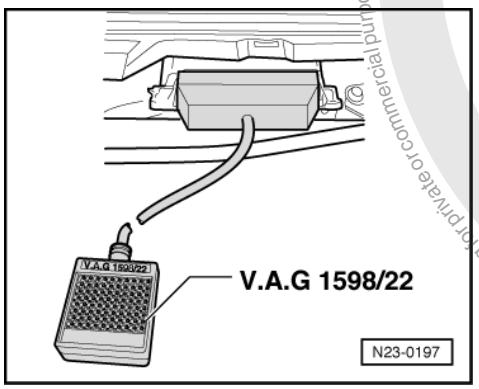

- -> Connect test box V.A.G 1598/22 to control unit wiring harness.
- Check wiring connection for open or short circuit between test box socket 6 and dash panel insert using current flow diagram.
  Wire resistance: max. 1.5 ω

=> Current flow diagrams, Electrical fault finding and Fitting locations

Protected by copyright. Copying for private or commercial purposes, in part or in whole, is not permitted unless authorised by Volkswagen AG. Volkswagen AG does not guarantee or accept any liability with respect to the correctness of information in this document. Copyright by Volkswagen AG.
satelettronica

4 - Replacing, coding and matching engine control unit

4.1 - Replacing, coding and matching engine control unit

4.2 - Replacing engine control unit

Special tools, workshop equipment, testers, measuring instruments and auxiliary items required

- Fault reader V.A.G 1551 with cable V.A.G 1551/3

Removing

- First print out the control unit identification and thereby the previous control unit coding as follows:
- Connect fault reader V.A.G 1551 (V.A.G 1552) and select the engine electronics control unit with the "address word" 01
  => Page 2 ; Connecting fault reader and selecting engine electronics control unit.

-> The fault reader V.A.G 1551 display will show the control unit identification, e.g.:

```
038906018FB 1.9ltr.      R4      EDC
00SG 2167 □
Coding 00002      WSC xxxxx
```

- Print out the control unit identification by pressing the fault reader print button.
- Press ⇒ key.
- Press keys 0 and 6 for the function "End output" and confirm entry with the Q key.

-> Indicated on display:

```
Rapid data transfer      HELP
Select function XX
```

- Switch off ignition.
- Remove left cover for plenum chamber.
- Release connector from control unit and pull off.

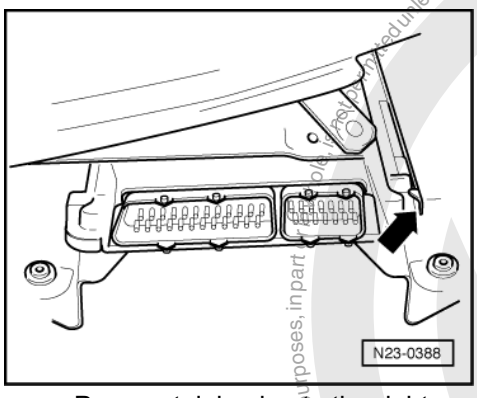

- -> Press retaining lug to the right -arrow- and pull control unit out of bracket.

Installing

- Place the new control unit into the retaining frame.
- Install control unit connector and lock.
- Check the previous coding and the coding of the new control unit => Page 131 .
- Adapt new control unit to the electronic immobilizer => Page 132

- Interrogate fault memory, if necessary, repair any faults and then erase fault memory => Page 6 , interrogating and erasing fault memory.

Protected by copyright. Copyright by Volkswagen AG.
Copying for private or commercial purposes, in part or in whole, is not permitted unless authorised by Volkswagen AG. Volkswagen AG does not guarantee or accept any liability with respect to the correctness of information in this document.
satelettronica

Protected by copyright. Copying for private or commercial purposes, in part or in whole, is not permitted unless authorised by Volkswagen AG. Volkswagen AG does not guarantee or accept any liability with respect to the correctness of information in this document. Copyright by Volkswagen AG.

4.3 - Coding engine control unit

If the appropriate code for the vehicle is not displayed or if the control unit has been renewed, the control unit must be coded as follows.

Special tools, workshop equipment, testers, measuring instruments and auxiliary items required

- Fault reader V.A.G 1551 (or vehicle system tester V.A.G 1552) with cable V.A.G 1551/3

Work sequence

- Connect the fault reader V.A.G 1551 (V.A.G 1552) and with ignition switched on select engine electronics control unit with the "Address word" 01.
  (Connecting fault reader and selecting engine electronics control unit => Page 2 .)
- Press ⇒key.

-> Indicated on display:

```
Rapid data transfer      HELP
Select function XX
```

- Press keys 0 and 7 for the function "Code control unit" and confirm entry with Q key.

-> Indicated on display:

```
Coding control unit      Q
Enter code number XXXXX    (0-32000)
```

- Enter the appropriate code number for this vehicle and confirm with Q key.

Code number	For vehicles with
00002	Engine codes: AGP, AGR, ALH, AQM, AYQ
00005	Engine code ASV with: - CAN combi-instrument, - Traction Control System (TCS) - Engine Braking Control (EBC)
00008	Engine code ASV with: - CAN combi-instrument, - Traction Control System (TCS) - Engine Braking Control (EBC) - Electronic Stability Programme (ESP)

-> The fault reader V.A.G 1551 display will show the control unit identification, e.g.:

```
038906018FB 1.9ltr.      R4      EDC
00SG 2167 □
Coding 00002      WSC xxxxx
```

- Switch ignition off and then on again.

Note:

The coding entered will be activated by switching the ignition off and then on again. If after entering the valid code the ignition is not switched off and on again, the fault "Control unit incorrectly coded" in the fault memory cannot be erased.

- Interrogate fault memory, if necessary, repair any faults and then erase fault memory => Page 6 , interrogating and erasing fault memory.

satelettronica

4.4 - Matching engine control unit to electronic immobilizer

Special tools, workshop equipment, testers, measuring instruments and auxiliary items required

- Fault reader V.A.G 1551 (or vehicle system tester V.A.G 1552) with cable V.A.G 1551/3

Test conditions

- Authorized vehicle key required.

Work sequence

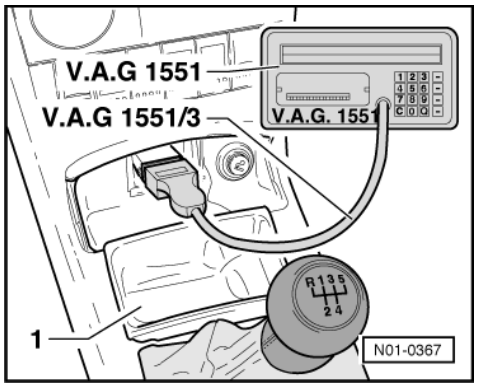

- -> Remove ash tray -1-.
- Connect fault reader V.A.G 1551 or vehicle system tester V.A.G 1552 with cable V.A.G 1551/3.
- Switch on ignition.
- Operate fault reader or vehicle system tester taking into account the information on the display:
- Press key 1 for "Rapid data transfer".
- Press keys 2 and 5 for address word "Immobilizer" and confirm entry with Q key.
- Press the ⇒key.

-> Indicated on display:

```
Rapid data transfer     HELP
Select function XX
```

- Press keys 1 and 0 for function "Adaption" and confirm entry with Q key.

-> Indicated on display:

```
Adaption
Feed in channel number XX
```

- Press key 0 twice for "Channel number 0" and confirm entry with Q key.

-> Indicated on display:

```
Adaption     Q
Erase learnt values?
```

- Confirm input with Q key.

-> Indicated on display:

```
Adaption
Learnt values have been erased
```

- Conclude adaption by pressing
  ⇒ key.
- Press keys 0 and 6 for the function "End output" and confirm entry with the Q key.
- Switch off ignition.

Protected copyright. Copyright by Volkswagen AG. Copying for private or commercial purposes, in part or in whole, is not permitted unless authorised by Volkswagen AG. Volkswagen AG does not guarantee or accept any liability with respect to the correctness of information in this document.
satelettronica

Note:

The identity of the engine control unit is read into the immobilizer control unit when next switching the ignition on.

Protected by copyright. Copying for private or commercial purposes, in part or in whole, is not permitted unless authorised by Volkswagen AG. Volkswagen AG does not guarantee or accept any liability with respect to the correctness of information in this document. Copyright by Volkswagen AG.

satelettronica

28 - Glow plug system

1 - Checking glow plug system

1.1 - Checking glow plug system

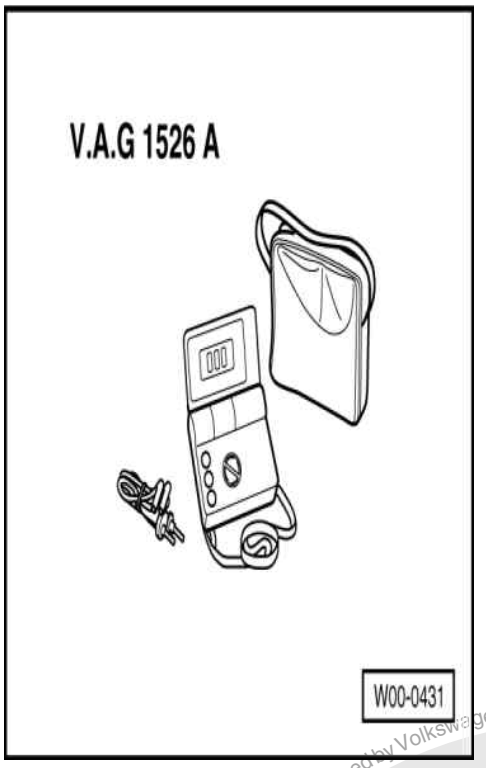

Special tools, workshop equipment, testers, measuring instruments and auxiliary items required

- V.A.G 1526 A Hand multimeter

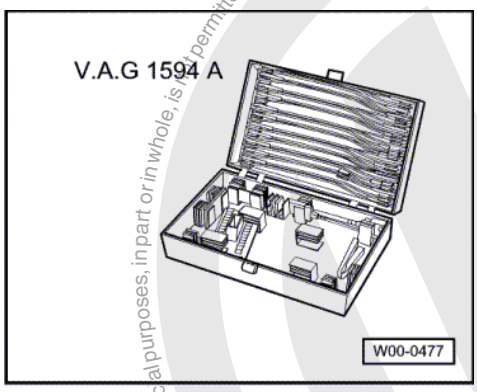

- V.A.G 1594 A Auxiliary test set

Test conditions

- Glow plug strip fuse in fuse holder on battery is OK.
- The battery voltage must be at least 11.5 V.
- All electrical consumers, e.g. lights and rear window heating must be switched off.
- Diesel direct injection system control unit (J248) OK.

satelettronica
Protected by copyright. Copyright by Volkswagen AG.
Volkswagen AG does not guarantee or accept any liability with respect to the correctness of information in this document. Copyright by Volkswagen AG.
Reproduction, in part or in whole, is not permitted unless authorised by Volkswagen AG. Volkswagen AG does not guarantee or accept any liability with respect to the correctness of information in this document. Copyright by Volkswagen AG.

Test sequence

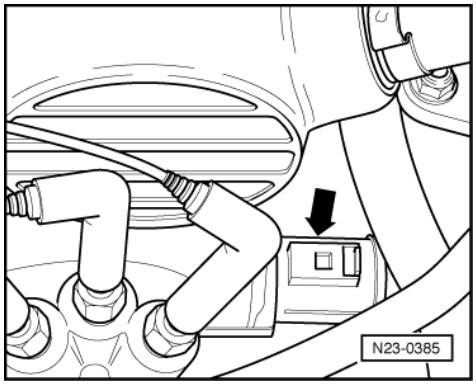

- -> Pull the 4 pin connector off coolant temperature sender (G62) with coolant temperature gauge sender (G2) -arrow-.

Note:

Pulling the connector off sender, simulates engine condition "cold" and when switching the ignition on the relevant glow period is carried out.

- Pull glow plug connector off glow plug.
- Connect multimeter to measure voltage between a glow plug connector and vehicle earth.
- Switch on ignition for approx. 20 seconds
  approx. battery voltage
  must be displayed.
- If no voltage is present:

=> Current flow diagrams, Electrical fault finding and Fitting locations

- Interrogate fault memory, if necessary, repair any faults and then erase fault memory => Page 6 , interrogating and erasing fault memory.

1.2 - Checking glow plugs

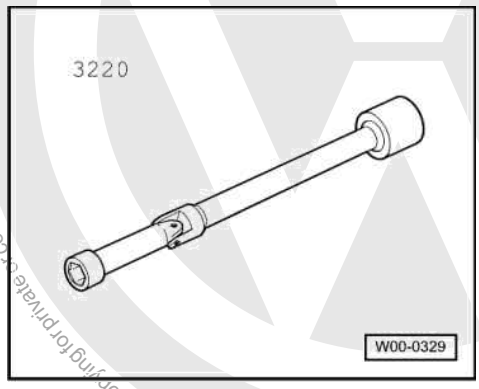

Special tools, workshop equipment, testers, measuring instruments and auxiliary items required

- 3220 Jointed socket

satelettronica

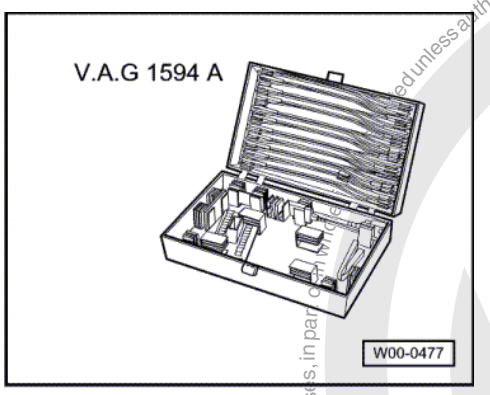

- V.A.G 1594 A Auxiliary test set
- Diode test lamp V.A.G 1527

Test conditions

- Glow plug strip fuse in fuse holder on battery is OK.
- The battery voltage must be at least 11.5 V.
- All electrical consumers, e.g. lights and rear window heating must be switched off.

Test sequence

- Pull glow plug connector off glow plug.

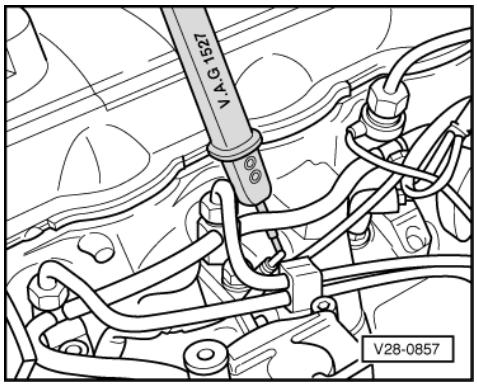

- -> Connect diode test lamp wire using auxiliary clips from auxiliary cable set to battery positive (+).
- Place diode test lamp probe on each glow plug one after the other.
  Diode lights up: glow plug OK.
  Diode does not light up: replace glow plug.
- Remove and install glow plugs with jointed spanner 3220
  Tightening torque: 15 Nm.

Protected by copyright. Copying for private or commercial purposes, in part or in whole, is not permitted unless authorised by Volkswagen AG. Volkswagen AG does not guarantee or accept any liability with respect to the correctness of information in this document. Copyright by Volkswagen AG.
satelettronica